Exhibit 2

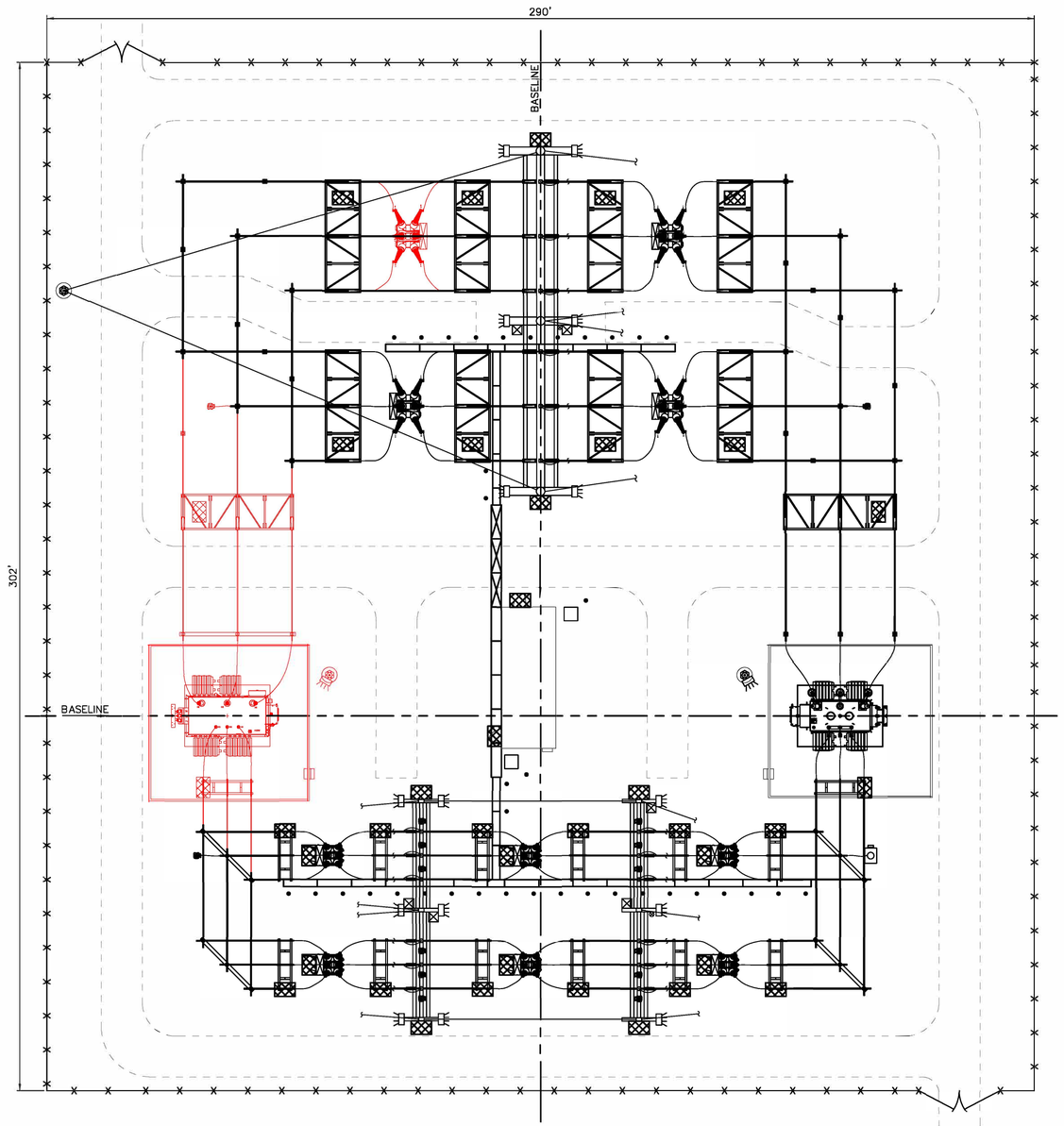

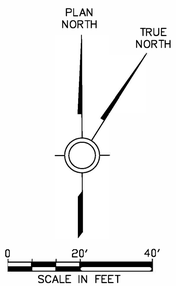

NOTES:

1. FUTURE EQUIPMENT IS SHOWN IN RED.

LEGEND:

- - - - - - APPROXIMATE MAINTENANCE DRIVE AREAS

P:\04233\00\DWG\RECORD\WRC\CAD\WRC-C-100.DWG

DGR ENGINEERING
ROCK RAPIDS, IOWA
(712) 472-2531

DATE	DRAWN BY	NO.	APPROVED BY	REVISION DESCRIPTION
06-20	KLV	1	PDK	CONFORMING TO CONSTRUCTION RECORDS
01-19	KLV	0	PDK	FOR CONSTRUCTION

BLACK HILLS ENERGY

WEST RAPID CITY SUBSTATION

ULTIMATE ARRANGEMENT

DRAWN BY KLV DATE 06-18
APPROVED BY PDK DATE 06-18

DWG NO. WRC-C-100 REVISION 1

NOTES:

1. 230 kV LOW AND HIGH BUS SHALL BE 3-1/2" AL IPS, SCH. 40, 6063-T6 ALUM. ALLOY WITH 795 ACSR "DRAKE" DAMPENING CABLE.
2. 230 kV BREAKER JUMPERS SHALL BE MADE OF DOUBLE 1272 AAC "NARCISSUS" CONDUCTORS.
3. 230 kV TRANSFORMER JUMPERS SHALL BE MADE OF SINGLE 1272 AAC "NARCISSUS" CONDUCTORS.
4. 69 kV BUS SHALL BE 3-1/2" AL IPS, SCH. 40, 6063-T6 ALUM. ALLOY WITH 795 ACSR "DRAKE" DAMPENING CABLE.
5. 69 kV BREAKER JUMPERS SHALL BE MADE OF DOUBLE 1272 AAC "NARCISSUS" CONDUCTORS.
6. 69 kV TRANSFORMER JUMPERS SHALL BE MADE OF DOUBLE 1272 AAC "NARCISSUS" CONDUCTORS.
7. BUS COUPLING LOCATIONS SHALL BE DETERMINED BY CONTRACTOR AS NEEDED BASED UPON BUS LENGTHS USED. LOCATE AS NEEDED PER THE SPECIFICATIONS. CONTRACTOR SHALL ACQUIRE 40' LONG BUS PIPE AND LIMIT USE OF COUPLERS ON LONG SPANS. DO NOT USE COUPLERS OR EXCESS SHORTER BUS PIECES TO CREATE A LONGER PIECE LESS THAN 40' IN LENGTH.

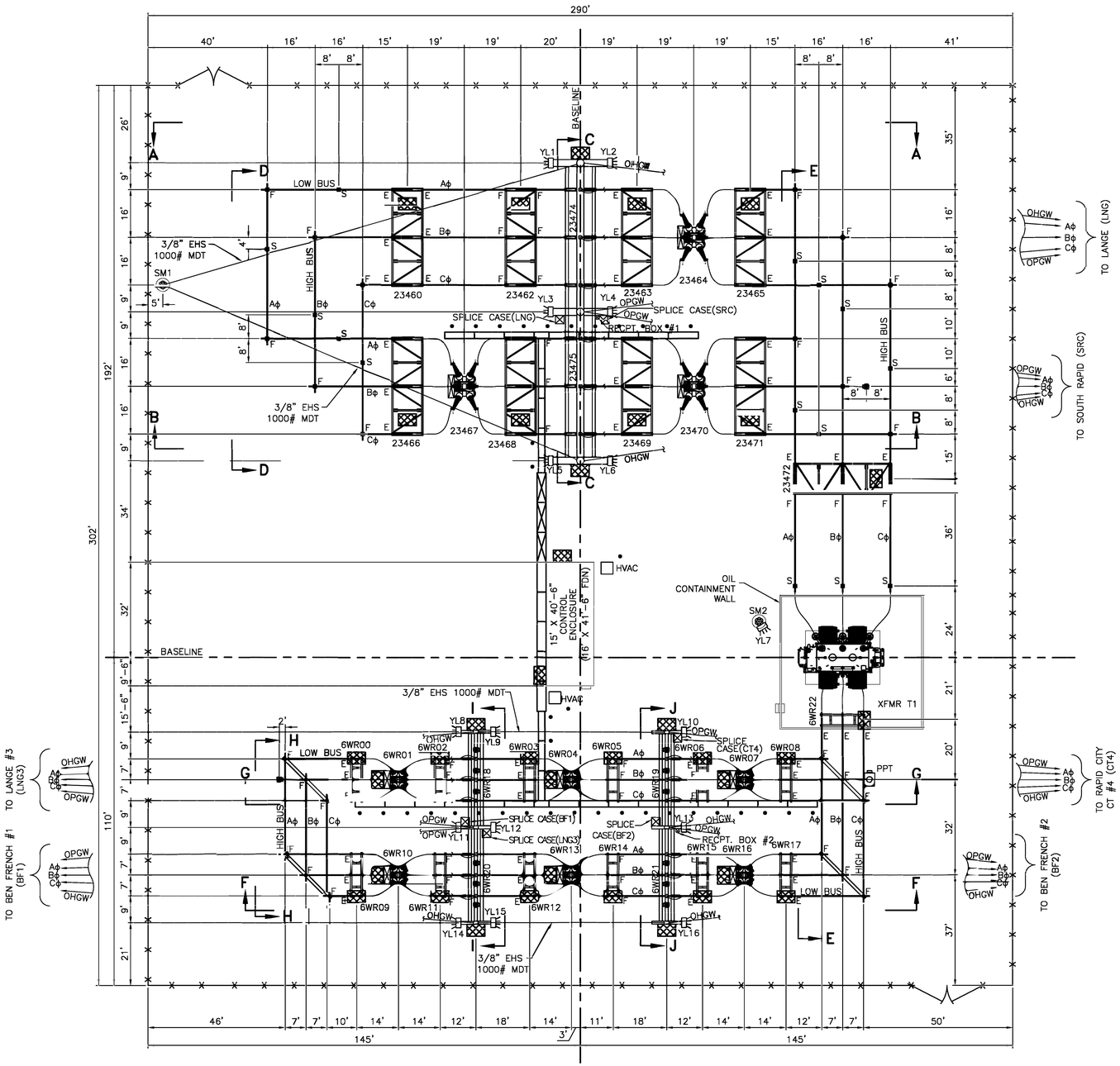

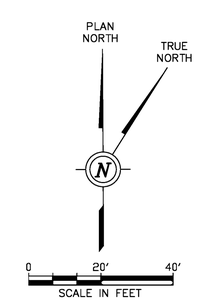

LEGEND:

- F FIXED (WELDED)
- E EXPANSION
- S SLIP
- FLOOD LIGHT
- YARD RECEPTACLE BOX
- SAFETY BOLLARD
- CABLE TRENCH DRIVE SECTION (HS20 RATED)
- CABLE TRENCH PEDESTRIAN SECTION
- CHAINLINK FENCE
- OPERATOR PLATFORM

DATE	DRAWN BY	NO.	APPROVED BY	REVISION DESCRIPTION
06-20	KLV	2	PDK	CONFORMING TO CONSTRUCTION RECORDS
07-19	KLV	1	PDK	REVISED FOR CONSTRUCTION
01-19	KLV	0	PDK	FOR CONSTRUCTION

BLACK HILLS ENERGY

WEST RAPID CITY SUBSTATION

GENERAL ARRANGEMENT

DRAWN BY KLV DATE 08-18
APPROVED BY PDK DATE 08-18
DWG NO. WRC-C-101 REVISION 2

DGR ENGINEERING
ROCK RAPIDS, IOWA
(712) 472-2531

P:\04023\00\DWG\RECORD\WRC\CAD\WRC-C-101.DWG

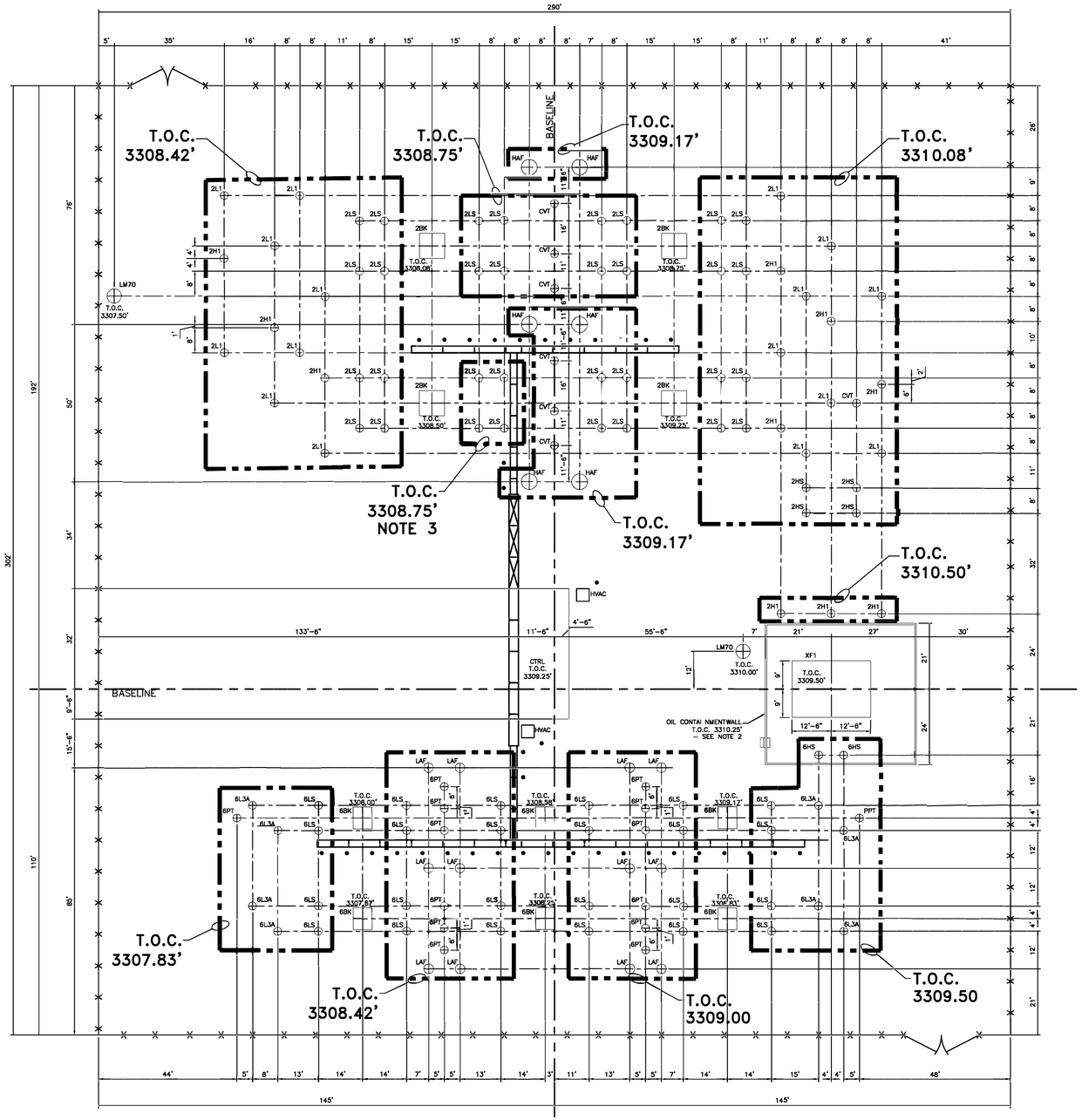

SYMBOL	DESCRIPTION	FND QTY
HAF	230kV A–FRAME	6
CVT	230kV CCVT STAND	7
2BK	230kV BREAKER PAD	4
2H1	230kV HIGH BUS SUPPORT 1PH	10
2L1	230kV LOW BUS SUPPORT 1PH	16
2LS	230kV LOW SWITCH STAND	32
2HS	230kV HIGH SWITCH STAND	4
XF1	230kV XFMR #1 PAD/CONTAINMENT	1
6L3A	69kV LOW BUS SUPPORT 3PH ANGLE	8
6LS	69kV SWITCH STAND LOW	24
6HS	69kV SWITCH STAND HIGH	2
6PT	69kV PT	13
LAF	69kV A–FRAME	12
6BK	69kV BREAKER PAD	6
PPT	69kV POWER PT	1
CTRL	CONTROL ENCLOSURE	1
LM70	SHIELD MAST 70'	2

NOTES:

1. 6L3A ANCHOR BOLTS ARE ANGLED 45° FROM THE BASELINES.
2. CONDUIT AND GROUND GRID ROUTED BELOW OIL CONTAINMENT WALL SHALL BE INSTALLED PRIOR TO INSTALLING THE WALL.
3. 2LS PIERS WERE INSTALLED 5" LOWER THAN PLAN ACCIDENTALLY. THE BUS WAS OFFSET TO ACCOUNT FOR THE DIFFERENCE.

LEGEND:

- FOUNDATIONS
- CABLE TRENCH DRIVE SECTION (HS20 RATED)
- CABLE TRENCH PEDESTRIAN SECTION
- CHAINLINK FENCE
- SAFETY BOLLARD

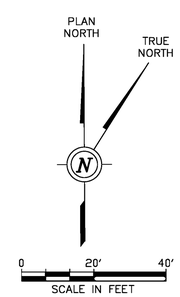

P:\0402330\DWG\RECORD\WRC\CAD\WRC-C-200.DWG

DGR ENGINEERING
ROCK RAPIDS, IOWA
(712) 472-2531

DATE	DRAWN BY	NO.	APPROVED BY	REVISION DESCRIPTION
06-20	KLV	1	PJK	CONFORMING TO CONSTRUCTION RECORDS
01-19	KLV	0	PJK	FOR CONSTRUCTION

BLACK HILLS ENERGY

WEST RAPID CITY SUBSTATION

FOUNDATION PLAN

DRAWN BY KLV DATE 09-18
APPROVED BY PJK DATE 09-18
DWG NO. WRC-C-200 REVISION NO. 1

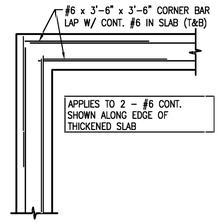

1/204 TYP. CORNER BAR DETAIL

0 1 2
SCALE (FT)

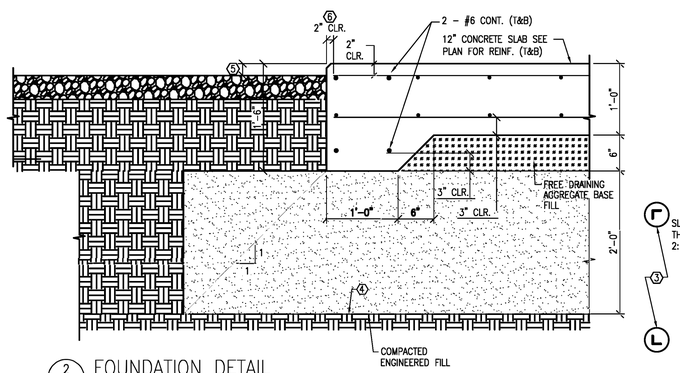

2/204 FOUNDATION DETAIL

0 1 2
SCALE (FT)

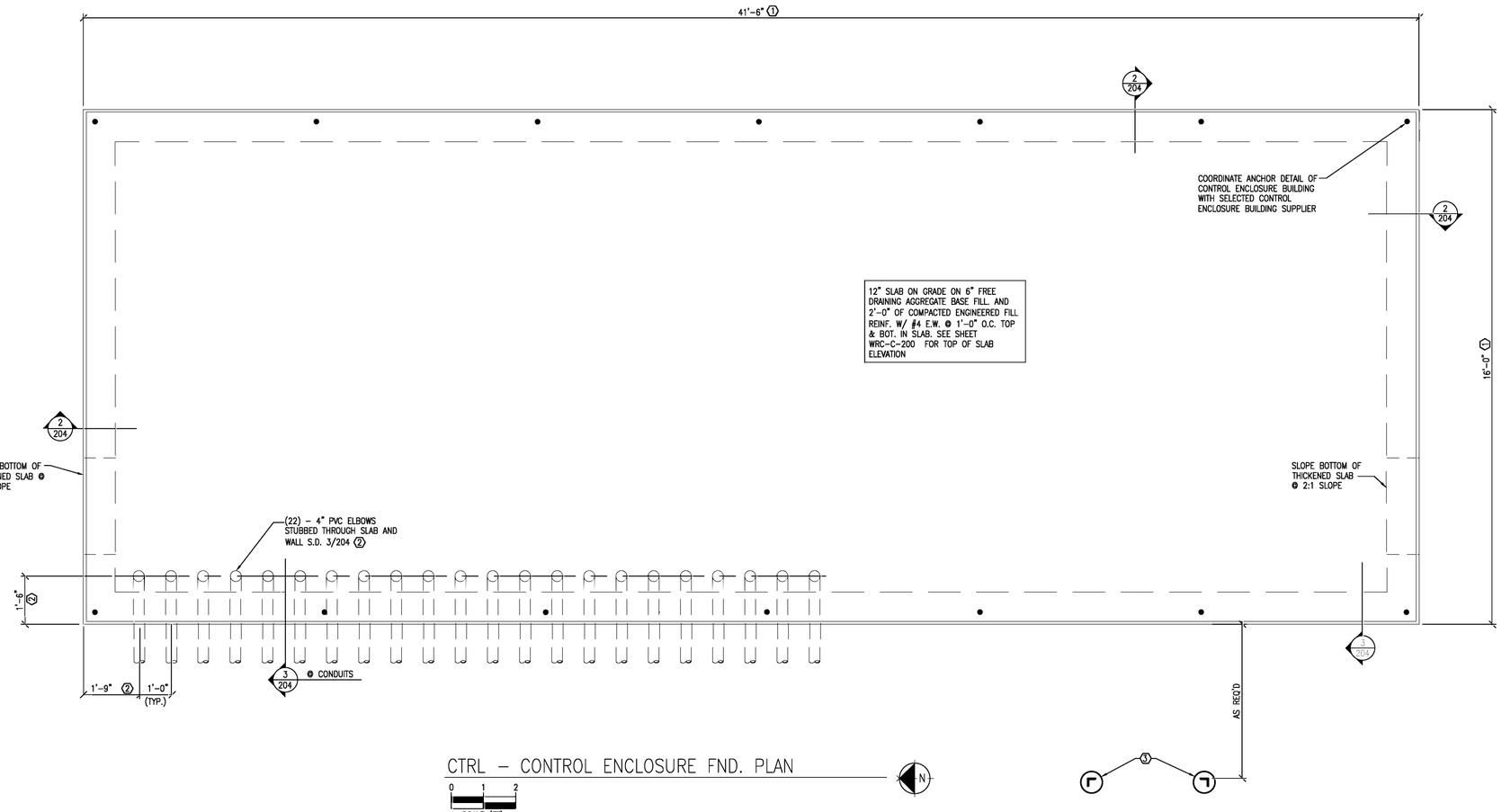

CTRL – CONTROL ENCLOSURE FND. PLAN

0 1 2
SCALE (FT)

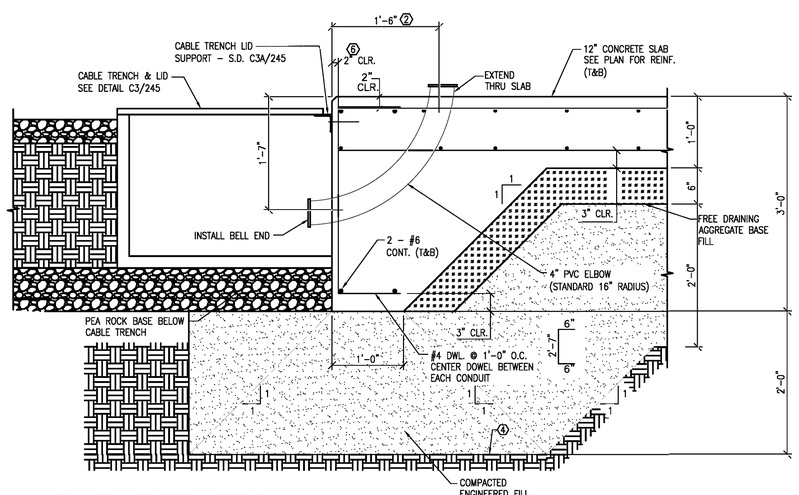

3/204 FOUNDATION DETAIL

0 1 2
SCALE (FT)

SHEET NOTES:

1. SEE 1/S204 FOR TYPICAL CORNER BAR DETAIL.

KEY NOTES:

1. COORDINATE FINAL BUILDING DIMENSIONS WITH ENGINEER.
2. COORDINATE FINAL SIZE, QUANTITY, & LOCATION OF CONDUIT WITH ENGINEER.
3. SEE DETAIL G20/267 FOR CONCRETE PIERS REQUIRED FOR SUPPORT OF STOOP GRATING.
4. AT EXCAVATION DEPTH, WE RECOMMEND THE EXPOSED SUBGRADE BE SCARIFIED TO A DEPTH OF AT LEAST 8-INCHES, THE MOISTURE CONTENT OF THE SCARIFIED SOILS ADJUSTED TO ±3% OF THE OPTIMUM MOISTURE CONTENT AND THE SCARIFIED SOILS COMPACTED TO AT LEAST 92% OF MAXIMUM MODIFIED PROCTOR DRY DENSITY (ASTM D 1557).
5. TOP OF SLAB ELEVATION SHALL BE A MAXIMUM OF 8" ABOVE FINAL ROCK SURFACE. INSTALL NATIVE FILL MATERIAL IN AREAS AS NEEDED AND GRADUALLY SLOPE AWAY FROM BUILDING FOUNDATION.
6. EDGE DISTANCE CLEARANCE SET TO MAINTAIN CLEAR SPACE FOR POST-INSTALLED BUILDING ANCHORS.

CONCRETE NOTES:

1. CONCRETE SHALL CONFORM TO AMERICAN CONCRETE INSTITUTE (ACI) CODES AND SPECIFICATIONS, LATEST EDITION.

   ACI 318 "BUILDING CODE REQUIREMENTS FOR REINFORCED CONCRETE"
   ACI 301 "SPECIFICATIONS FOR STRUCTURAL CONCRETE".
2. CAST-IN-PLACE CONCRETE SHALL HAVE A 28 DAY COMPRESSIVE STRENGTHS OF 4000 PSI – AIR ENTRAINED.
3. CONCRETE MIX DESIGN SHALL BE BY AN INDEPENDENT TESTING LABORATORY (NOT BY CONCRETE SUBCONTRACTOR)
4. CAST-IN-PLACE CONCRETE SHALL BE SUBJECT TO TESTING BY AN INDEPENDENT TESTING LABORATORY AS FOLLOWS: TESTING REQUIREMENTS: 4 – TEST CYLINDERS PER EACH 50 YARDS OR EACH DAYS POUR
5. ALL NON-WELDED REINFORCING STEEL SHALL BE GRADE 60 DEFORMED, BILLET-STEEL ASTM A615, U.O.N. ALL WELDED WIRE FABRIC (WWF) SHALL BE PLAIN, ASTM A185.
6. ALL WELDED REINFORCING STEEL SHALL BE GRADE 60. LOW CARBON, ASTM A706.
7. CLEAR CONCRETE COVER FOR ALL REINFORCING SHALL BE AS FOLLOWS, UNLESS OTHERWISE NOTED ON THE DRAWING:
   - CONCRETE ON SOIL . . . . . 3"
   - SLAB ON GRADE . . . . . MID HEIGHT
   - WALLS, STRUCTURAL SLABS
     - FORMED AND EXPOSED TO EARTH OR WEATHER:
       - #6 THROUGH #18 . . . . . 2"
       - #5 AND SMALLER . . . . . 3"
     - NOT EXPOSED TO EARTH AND WEATHER:
       - #11 AND SMALLER . . . . . 3/4"
   - DRILLED PIERS (COVER TO STIRRUPS OR TIES) . . . . . 3"
8. REINFORCING STEEL SHALL BE BENT AND PLACED IN ACCORDANCE WITH ACI CODE.
9. REINFORCING SHALL BE PLACED IN LONGEST LENGTH POSSIBLE. WHERE REINFORCING IS TO BE SPLICED, LAP REINFORCING A MINIMUM OF 19" FOR #4 BARS, 24" FOR #5 BARS & 36" FOR #6 BARS.
10. PROVIDE ADEQUATE SUPPORT BARS AND ACCESSORIES TO HOLD REINFORCING BARS FIRMLY IN PLACE.

EXCAVATION AND BACKFILL:

1. FOOTING EXCAVATIONS SHALL BE EXCAVATED TO PROPER LINE AND LEVEL TO INSURE MINIMUM CONCRETE COVER OF FOOTING REINFORCEMENT AND FOR FOOTING DEPTH.
2. BACKFILL SHALL BE COMPACTED BY MECHANICAL MEANS. FLOODING OR WATER INUNDATION SHALL NOT BE PERMITTED.
3. BACKFILL SHALL BE PLACED IN 8" EQUAL LIFTS AND COMPACTED AS FOLLOWS:

   ASTM D1557 MODIFIED PROCTOR
   92% DRY DENSITY = SCARIFIED AND COMPACTED SUBGRADE SOILS BENEATH FOOTINGS, SLABS ON GRADE, PAVEMENT, AND STRUCTURAL FILL
   95% DRY DENSITY = BELOW FOOTINGS
   95% DRY DENSITY = BELOW SLAB ON GRADE
   92% DRY DENSITY = EXTERIOR BACKFILL AND PAVEMENTS
4. FREE DRAINING AGGREGATE BASE FILL SHALL BE A WELL GRADED AGGREGATE BASE MATERIAL CONFORMING TO THE FOLLOWING GRADING:

1 1/2" ø	–	100%
1" ø	–	90% TO 100%
1/2" ø	–	60% to 85%
#4	–	45% TO 65%
#8	–	33% TO 53%
#200	–	3% TO 6%

   LIQUID LIMIT < 25, PI < 3
5. COMPACTED ENGINEERED FILL SHALL CONSIST OF A WELL GRADED GRANULAR PIT RUN OR CRUSHED/SCREENED MATERIAL WITH A MAXIMUM AGGREGATE SIZE OF 3-INCHES, NO MORE THAN 15% PASSING THE #200 SIEVE WITH A LIQUID LIMIT LESS THAN 25.

DATE	DRAWN BY	NO.	APPROVED BY	REVISION DESCRIPTION
06-20	KLV	3	PDK	CONFORMING TO CONSTRUCTION RECORDS
08-01	WKO	2	NRM/JVN	TITLE BLOCK REVISION
07-19	WKO	1	NRM/JVN	RELOCATED THICKENED SLAB
01-19	WKO	0	NRM/JVN	FOR CONSTRUCTION

BLACK HILLS ENERGY

WEST RAPID CITY SUBSTATION
FOUNDATION DETAILS
CONTROL ENCLOSURE

DRAWN BY LJD DATE XX-19
APPROVED BY NRM DATE XX-19
DWG NO. WRC-C-204 REVISED 3 NO.

SANDMAN Structural Engineers
1587 30th Avenue South – Moorhead, MN 56560
218-227-0022 www.sandmanSE.com
Project: 1887-12

P:\0412330\DWG\RECORD\WRC\CAD\WRC-C-204.DWG

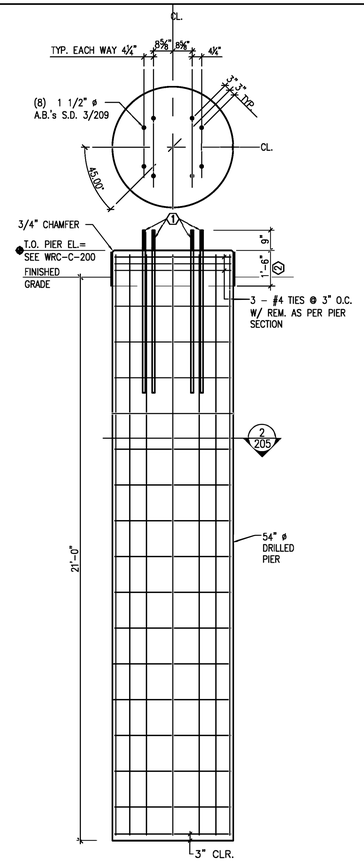

LM70 – SHIELD MAST

0 1 2
SCALE (FT)

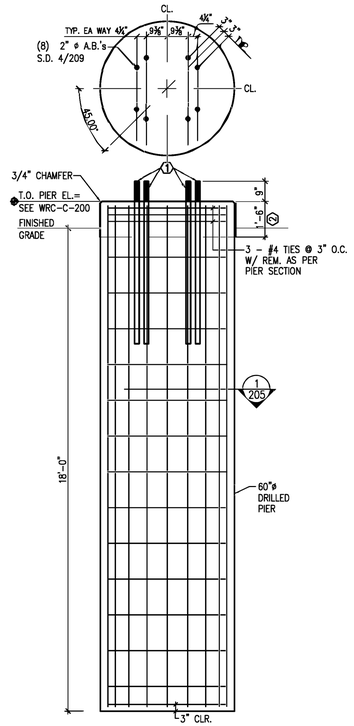

HAF – 230 kV A-FRAME DEADEND

0 1 2
SCALE (FT)

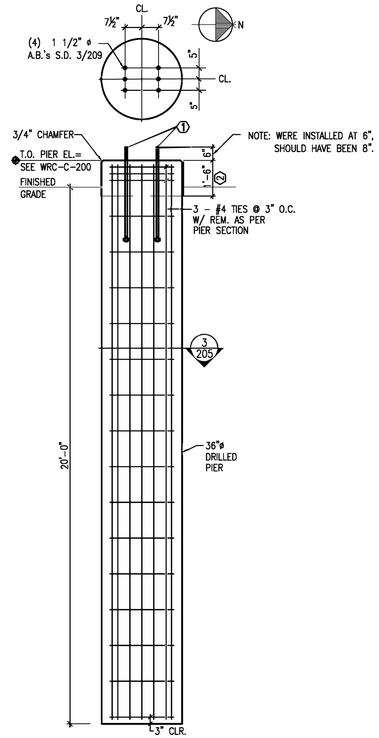

LAF – 69 kV A-FRAME DEADEND

0 1 2
SCALE (FT)

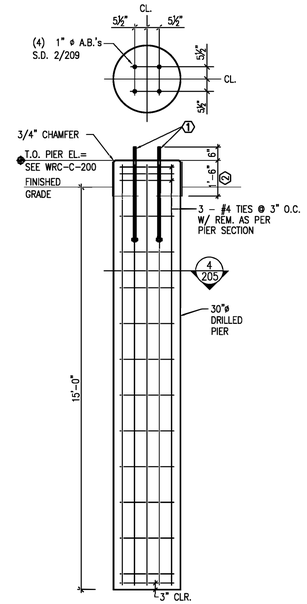

2LS – 230 kV LOW SWITCH STRUCTURE
2L1 – 230 kV LOW SINGLE PHASE BUS STRUCTURE
CVT – 230 kV SINGLE PHASE CVT STRUCTURE

0 1 2
SCALE (FT)

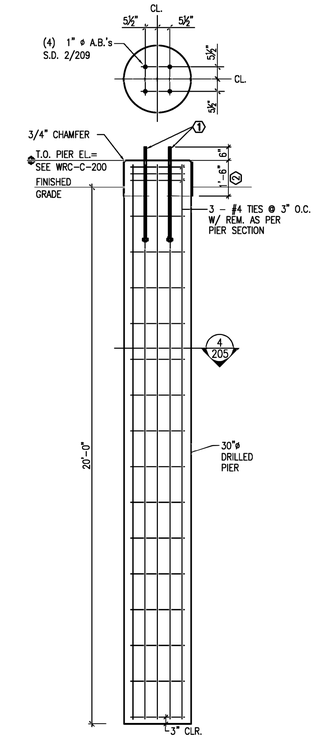

6LS – 69 kV LOW SWITCH STRUCTURE
6L3A – 69 kV LOW THREE PHASE BUS STRUCTURE, 45°
6PT – 69 kV SINGLE PHASE PT STRUCTURE
PPT – 69 kV SINGLE PHASE POWER PT STRUCTURE
6HS – 69 kV HIGH SWITCH STRUCTURE

0 1 2
SCALE (FT)

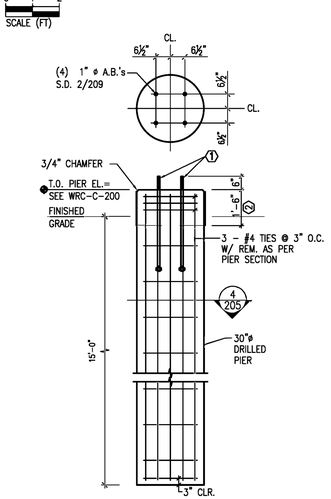

2HS – 230 kV HIGH SWITCH STRUCTURE
2H1 – 230 kV HIGH SINGLE PHASE BUS STRUCTURE

0 1 2
SCALE (FT)

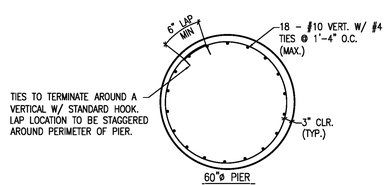

1 / 205 PIER SECTION

0 1 2
SCALE (FT)

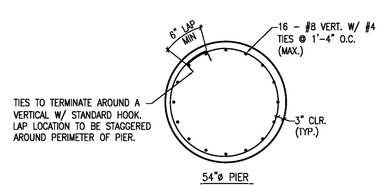

2 / 205 PIER SECTION

0 1 2
SCALE (FT)

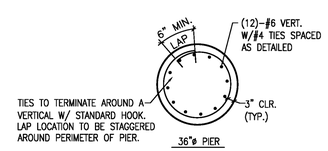

3 / 205 PIER SECTION

0 1 2
SCALE (FT)

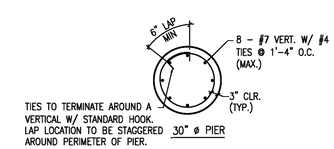

4 / 205 PIER SECTION

0 1 2
SCALE (FT)

SHEET NOTES:

1. SEE SHEET WRC-C-204 FOR GENERAL CONCRETE, FOUNDATION NOTES, AND EXCAVATION/BACKFILL NOTES.
2. SEE SHEET WRC-C-200 FOR LOCATION & GENERAL ARRANGEMENT OF DRILLED PIER FOUNDATIONS.

KEY NOTES:

1. ANCHOR BOLTS TO BE PROVIDED BY OWNER & SET BY THIS CONTRACTOR. COORDINATE ANCHOR BOLT QUANTITY & PATTERN WITH STEEL & EQUIPMENT SUPPLIED.
2. UPPER 1'-6" OF CONCRETE PIER SHALL BE STEEL FORMED SURFACE.

DATE	DRAWN BY	NO.	APPROVED BY	REVISION DESCRIPTION
06-20	KLV	1	PDK	CONFORMING TO CONSTRUCTION RECORDS
01-19	WKD	0	NRM/JVN	FOR CONSTRUCTION

BLACK HILLS ENERGY

WEST RAPID CITY SUBSTATION
FOUNDATION DETAILS
DRILLED PIERS

DRAWN BY LJD DATE XX-19
APPROVED BY NRM DATE XX-19
DWG NO. WRC-C-205
REVISION NO. 1

SANDMAN Structural Engineers
1587 30th Avenue South – Moorhead, MN 56560
218.227.0022 www.sandmanse.com
Project: 1887-12

P:\04\233\00\DWG\RECORD\WRC\CAD\WRC-C-205.DWG

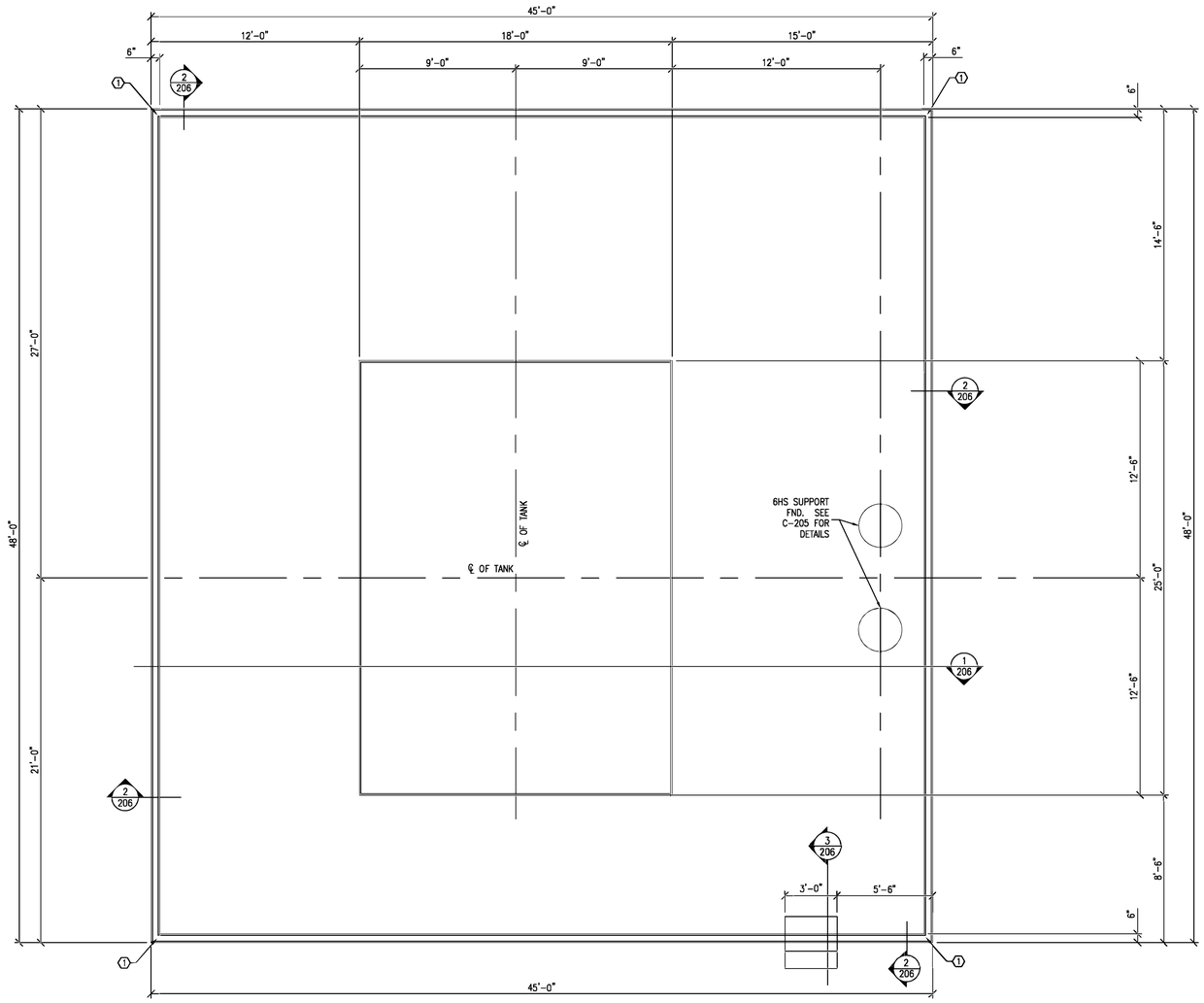

XF1 TRANSFORMER PAD FOOTING & FOUNDATION PLAN

N

0 2 4
SCALE (FT)

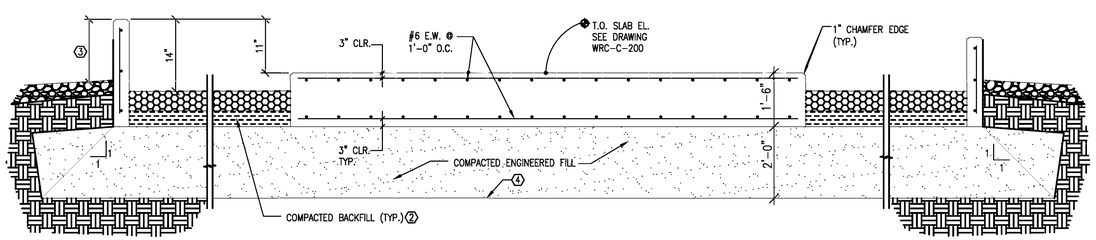

1/206 TRANSFORMER PAD SECTION
NO SCALE

SHEET NOTES:

1. SEE SHEET WR-C-204 FOR GENERAL CONCRETE, FOUNDATION, AND EXCAVATION/BACKFILL NOTES.

2. BELOW-GRADE GROUND GRID AND RACEWAY INSTALLATION SHALL BE PERFORMED INSIDE CONTAINMENT DURING EXCAVATION AND BACKFILLING AND PRIOR TO INSTALLATION OF THE CURB/WALL. EXCAVATION BELOW THE CURB/WALL WILL NOT BE ALLOWED.

KEY NOTES:

1. PROVIDE (3) – #4 X 3'-0" CORNER BARS. LAP WITH HORIZONTAL #4'S.

2. 6" COMPACTED BACKFILL INSIDE CONTAINMENT AREA SHALL CONSIST OF SOILS CLASSIFIED AS SILTY CLAYS, SILTS (IF COHESIVE), AND CLAYEY SILTS WHICH CAN GENERALLY MEET A PERMEABILITY RATE BETWEEN $1x10^{-5}$ CM/SEC AND $1x10^{-4}$ CM/SEC. THIS PERMEABILITY RATE SHOULD ALLOW APPROXIMATELY 0.34" TO 3.4" OF WATER DRAINAGE THROUGH THE 6" COMPACTED BACKFILL PER DAY. CONSULT WITH GEOTECHNICAL ENGINEER AS NEEDED TO LOCATE APPROPRIATE MATERIAL AND FOR RECOMMENDATIONS ON THE COMPACTION REQUIREMENTS. CONTRACTOR CAN TAKE A SAMPLE OF MATERIAL TO THE GEOTECHNICAL ENGINEER TO GET ESTIMATED PERMEABILITY BASED UPON MATERIAL AND SOIL TABLES. COMPACTION TO 95% IS MINIMUM ALLOWED BUT CONTRACTOR SHOULD CONSULT WITH GEOTECHNICAL ENGINEER FOR RECOMMENDED COMPACTION BASED UPON ACTUAL MATERIAL. IT IS INTENDED THAT BORROW MATERIAL EXCAVATED FROM THIS SITE IS TO BE USED FOR THE 6" COMPACTED BACKFILL INSIDE THE CONTAINMENT AREA. CONTRACTOR SHALL INSPECT EXCAVATED MATERIAL AND COORDINATE WITH GEOTECHNICAL ENGINEER AS NEEDED TO IDENTIFY AND REVIEW ALL MATERIAL ON SITE FOR USE PRIOR TO REMOVAL FROM SITE.

3. TOP OF CURB ELEVATION WILL VARY FROM APPROXIMATELY 2" TO 16" DUE TO SLOPE OF YARD. INSTALL NATIVE FILL MATERIAL IN AREAS AS NEEDED AND GRADUALLY SLOPE AWAY FROM CURB.

4. AT EXCAVATION DEPTH, WE RECOMMEND THE EXPOSED SUBGRADE BE SCARIFIED TO A DEPTH OF AT LEAST 8-INCHES, THE MOISTURE CONTENT OF THE SCARIFIED SOILS ADJUSTED TO ±3% OF THE OPTIMUM MOISTURE CONTENT AND THE SCARIFIED SOILS COMPACTED TO AT LEAST 92% OF MAXIMUM MODIFIED PROCTOR DRY DENSITY (ASTM D 1557).

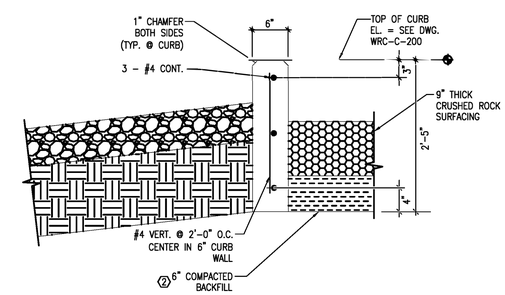

2/206 CURB DETAIL
0 1 2
SCALE (FT)

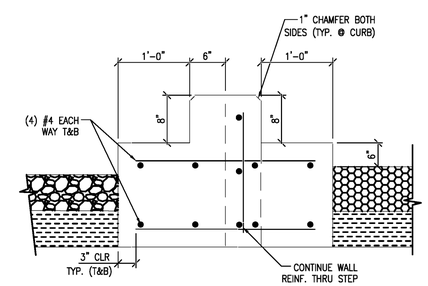

3/206 STEP DETAIL
0 1 2
SCALE (FT)

P:\0402330\DWG\RECORD\WRC\CAD\WRC-C-206.DWG

SANDMAN Structural Engineers
1587 30th Avenue South – Moorhead, 218-227-0022 www.SANDMAN.com Project: 1887-12

DATE	DRAWN BY	NO.	APPROVED BY	REVISION DESCRIPTION
06-20	KLV	1	PDK	CONFORMING TO CONSTRUCTION RECORDS
08-01	WKD	2	NRM/JVN	TITLE BLOCK REVISION
07-19	WKD	1	NRM/JVN	REVISED FOR CONSTRUCTION
01-19	WKD	0	NRM/JVN	FOR CONSTRUCTION

BLACK HILLS ENERGY

WEST RAPID CITY SUBSTATION
FOUNDATION DETAILS
XFMR T1

DRAWN BY LJD DATE XX-19
APPROVED BY NRM DATE XX-19
DWG NO. WRC-C-206
SHEET NO. 3

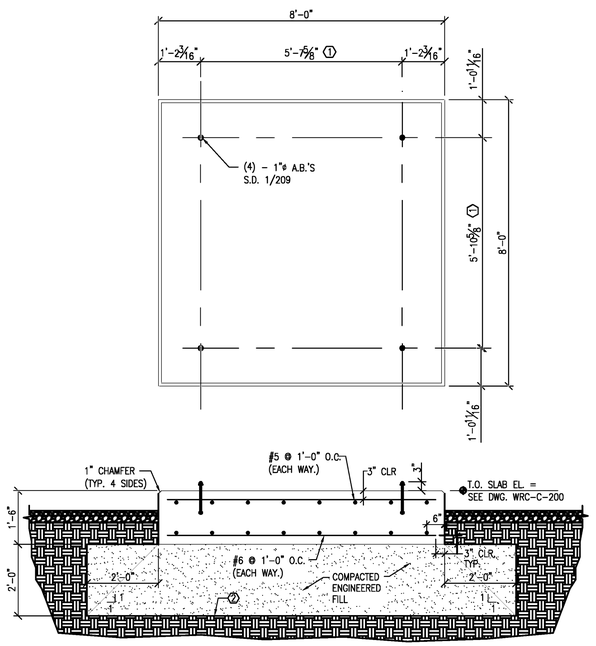

N

2BK – 230 kV CIRCUIT BREAKER FOUNDATION

0 1 2
SCALE (FT)

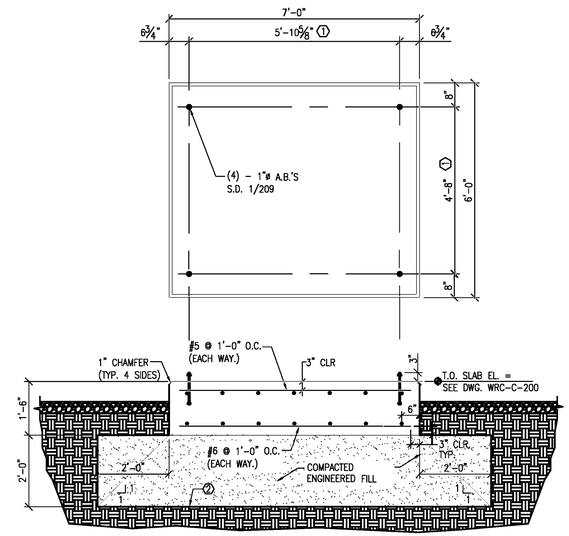

N

6BK – 69kV CIRCUIT BREAKER FOUNDATION

0 1 2
SCALE (FT)

SHEET NOTES:

1. SEE SHEET WRC-C-204 FOR GENERAL CONCRETE, FOUNDATION, AND EXCAVATION/BACKFILL NOTES.

KEY NOTES:

① COORDINATE ANCHOR BOLT SIZE AND LOCATIONS W/ EQUIPMENT DRAWINGS AND ENGINEER OF RECORD.

② AT EXCAVATION DEPTH, WE RECOMMEND THE EXPOSED SUBGRADE BE SCARIFIED TO A DEPTH OF AT LEAST 8-INCHES, THE MOISTURE CONTENT OF THE SCARIFIED SOILS ADJUSTED TO ±3% OF THE OPTIMUM MOISTURE CONTENT AND THE SCARIFIED SOILS COMPACTED TO AT LEAST 92% OF MAXIMUM MODIFIED PROCTOR DRY DENSITY (ASTM D 1557).

DATE	DRAWN BY	NO.	APPROVED BY	REVISION DESCRIPTION
06-20	KLV	1	PJK	CONFORMING TO CONSTRUCTION RECORDS
01-19	WKD	0	NRM/JVN	FOR CONSTRUCTION

BLACK HILLS ENERGY

WEST RAPID CITY SUBSTATION
FOUNDATION DETAILS
SLABS

DRAWN BY: LJQ DATE: XX-19
APPROVED BY: NRM DATE: XX-19
DWG NO. WRC-C-207
REVISION NO. 1

SANDMAN
Structural Engineers
1587 30th Avenue South – Moorhead, 218.227.0022 www.sandmanse.com
Project: 1887-12

P:\0402330\DWG\RECORD\WRC\CAD\WRC-C-207.DWG

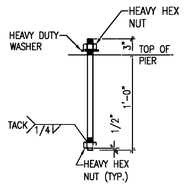

1 / 209 1" DIA. CIRCUIT BREAKER A.B. ①
(F1154 – GRADE 55–S1)(40 REQUIRED)

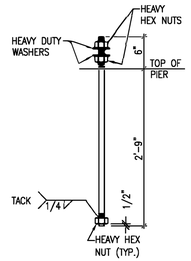

2 / 209 1" DIA. A.B. ①
(F1154 – GRADE 55–S1)(468 REQUIRED)

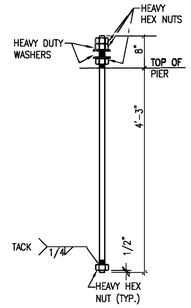

3 / 209 1–1/2" DIA. A.B. ②
(F1154 – GRADE 55–S1) (88 REQUIRED)

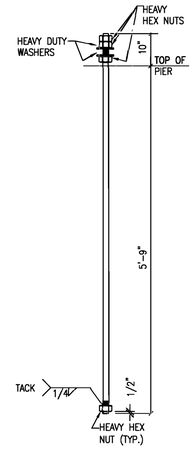

4 / 209 2" DIA. A.B. ②
(F1154 – GRADE 55–S1)(48 REQUIRED)

SHEET NOTES:

1. TEMPLATES SHALL BE SECURELY FASTENED TO ANCHOR BOLTS. BOTTOM TEMPLATES SHALL BE SECURELY FASTENED TO BOTTOM NUT WITH EITHER WIRE TIES OR TACK WELDED. BOTTOM TEMPLATES FOR REBAR SHALL BE TACK WELDED TO REBAR ANCHOR BOLT.

KEY NOTES:

① SHIP ANCHOR BOLTS UNASSEMBLED

② SHIP ANCHOR BOLT CAGES PRE–ASSEMBLED W/ TOP & BOTTOM STEEL TEMPLATES

P:\041233\00\DWG\RECORD\WRC\CAD\WRC-C-209.DWG

SANDMAN Structural Engineers
1587 30th Avenue South – Moorhead, 218.227.0022 www.sandmanse.com
Project: 1857–12

DATE	DRAWN BY	NO.	APPROVED BY	REVISION DESCRIPTION
06-20	KLV	1	PJK	CONFORMING TO CONSTRUCTION RECORDS
01-19	WKD	0	NRM/JVN	FOR CONSTRUCTION

BLACK HILLS ENERGY

WEST RAPID CITY SUBSTATION

ANCHOR BOLT DETAILS

DRAWN BY LJD DATE XX-19
APPROVED BY NRM DATE XX-19
DWG NO. WRC–C–209
SHEET NO. 1

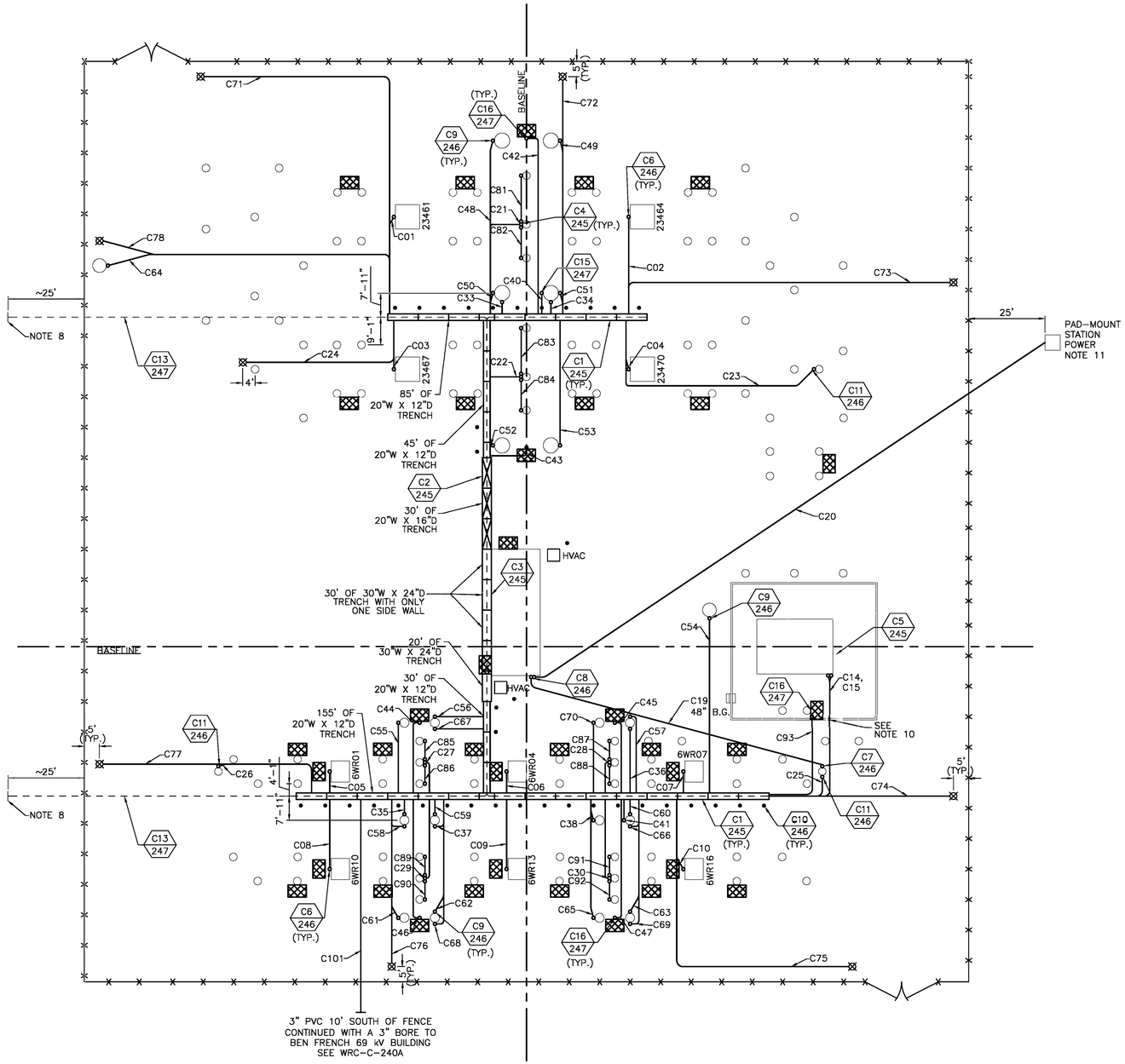

LEGEND:

- FOUNDATIONS
- CABLE TRENCH DRIVE SECTION (HS20 RATED) WITH FIBRELITE LIDS
- CABLE TRENCH PEDESTRIAN SECTION WITH CONCRETE LIDS
- OPERATOR PLATFORM
- CHAINLINK FENCE
- SCHEDULE 40 PVC CONDUIT – SEE DWG WRC–C–242 FOR CONDUIT LIST
- 4" PERFORATED HDPE DRAIN
- 120/240 VAC OUTLET
- SAFETY BOLLARD FOR TRENCH – SEE DETAIL C10/246
- C1 / 245 — DETAIL # / DWG #
- CONDUIT MARKER–SEE DETAIL C12/247

NOTES:

1. ALL CONDUIT SHALL BE BURIED A MINIMUM OF 36" BELOW SUBGRADE, AS INDICATED ON THE CONDUIT DETAILS, UNLESS INDICATED OTHERWISE ON THIS PLAN DRAWING.
2. CONDUIT ROUTING IS APPROXIMATE. IF DEVIATIONS ARE REQUIRED APPROVAL MUST BE OBTAINED FROM THE OWNER AND ACCURATE AS–BUILT LOCATION SHALL BE PROVIDED TO THE OWNER.
3. PULL WIRE SHALL BE INSTALLED IN ALL CONDUITS.
4. ALL CONDUIT WILL BE STUBBED AND CAPPED AT LEAST 6" ABOVE GROUND LINE. CONTRACTOR SHALL EXTEND CONDUIT TO EQUIPMENT AS NOTED ON DETAIL DRAWINGS.
5. TOP OF CABLE TRENCH SHOULD BE APPROXIMATELY 3" ABOVE TOP OF ROCK SURFACING. SLOPE CABLE TRENCH WITH GRADE AS NEEDED.
6. USE CABLE CLIPS FROM CABLE TRENCH SUPPLIER FOR ROUTING 4/0 GROUND WIRE IN CABLE TRENCH.
7. WRAP RGS CONDUIT AT ALL SUBGRADE TO ABOVE GRADE CONDUIT TRANSITIONS WITH ANTI–CORROSION TAPE.
8. DRAIN PIPE ELEVATION SHALL ALLOW DRAINAGE TO THE DITCHES WEST (PLAN WEST) OF THE SUBSTATION FENCE. EXTEND TO DITCH AS NEEDED AND INSTALL A PREFABRICATED CMP FLARED END OUTLET WITH RODENT GUARD. CONNECT OUTLET TO DRAIN PIPE WITH WATER TIGHT PCC CONNECTION. INSTALL A PROTECTIVE FENCE POST AT THE OUTLET LOCATION TO PREVENT TRAFFIC FROM DRIVING ON THE OUTLET.
9. CONDUIT FOR STATION POWER WILL BE ROUTED DIRECTLY TO BUILDING TO KEEP ISOLATED FROM CONTROL CABLES. BURY THESE CONDUITS A MINIMUM OF 48" BELOW GRADE AND USE RGS RISER ELBOWS FOR THESE CONDUITS.
10. INSTALL CONDUIT (AND GROUND GRID) BELOW TRANSFORMER OIL CONTAINMENT WALL PRIOR TO INSTALLATION OF WALL.
11. CONDUIT C20 CAN ALSO BE USED FOR TEMPORARY CONSTRUCTION POWER FROM BHE DISTRIBUTION. CONTRACTOR TO COORDINATE AND REVIEW INSTALLATION AS NEEDED. CUTOVER OF TEMPORARY CONSTRUCTION STATION POWER SHALL OCCUR UPON ARRIVAL OF CONTROL ENCLOSURE ON SITE.

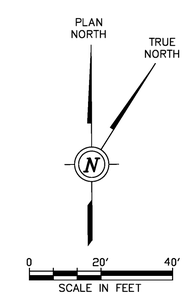

P:\042233\00\DWG\RECORD\WRC\CAD\WRC-C-240.DWG

DGR ENGINEERING
ROCK RAPIDS, IOWA
(712) 472-2531

DATE	BRAWN BY	NO.	APPROVED BY	REVISION DESCRIPTION
06-20	KLV	1	PDK	CONFORMING TO CONSTRUCTION RECORDS
01-19	KLV	0	PDK	FOR CONSTRUCTION

BLACK HILLS ENERGY

WEST RAPID CITY SUBSTATION

RACEWAY PLAN

BRAWN BY KLV DATE 10-18
APPROVED BY PDK DATE 10-18
DWG NO. WRC-C-240 REVISION 1

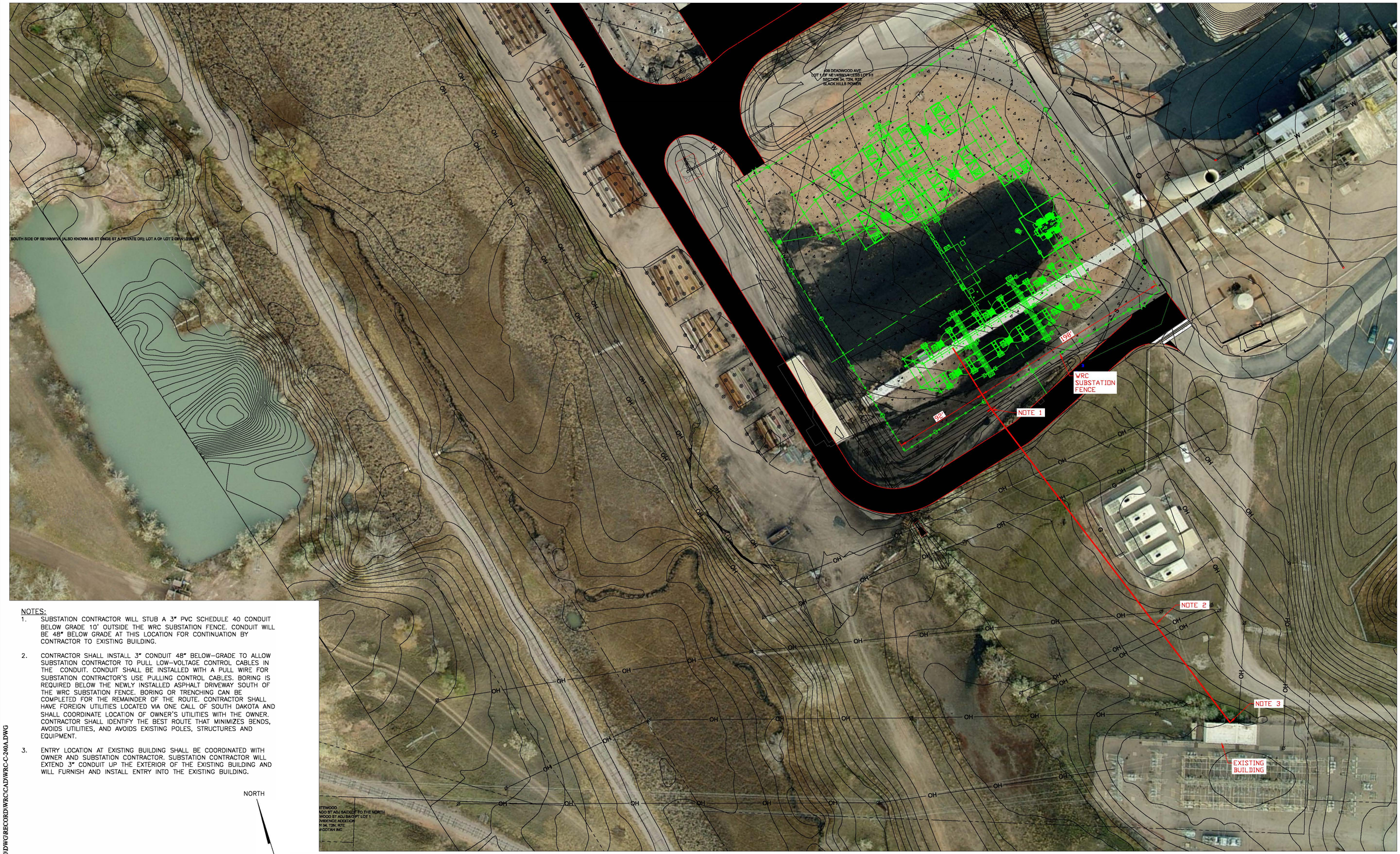

NOTES:

1. SUBSTATION CONTRACTOR WILL STUB A 3" PVC SCHEDULE 40 CONDUIT BELOW GRADE 10' OUTSIDE THE WRC SUBSTATION FENCE. CONDUIT WILL BE 48" BELOW GRADE AT THIS LOCATION FOR CONTINUATION BY CONTRACTOR TO EXISTING BUILDING.

2. CONTRACTOR SHALL INSTALL 3" CONDUIT 48" BELOW-GRADE TO ALLOW SUBSTATION CONTRACTOR TO PULL LOW-VOLTAGE CONTROL CABLES IN THE CONDUIT. CONDUIT SHALL BE INSTALLED WITH A PULL WIRE FOR SUBSTATION CONTRACTOR'S USE PULLING CONTROL CABLES. BORING IS REQUIRED BELOW THE NEWLY INSTALLED ASPHALT DRIVEWAY SOUTH OF THE WRC SUBSTATION FENCE. BORING OR TRENCHING CAN BE COMPLETED FOR THE REMAINDER OF THE ROUTE. CONTRACTOR SHALL HAVE FOREIGN UTILITIES LOCATED VIA ONE CALL OF SOUTH DAKOTA AND SHALL COORDINATE LOCATION OF OWNER'S UTILITIES WITH THE OWNER. CONTRACTOR SHALL IDENTIFY THE BEST ROUTE THAT MINIMIZES BENDS, AVOIDS UTILITIES, AND AVOIDS EXISTING POLES, STRUCTURES AND EQUIPMENT.

3. ENTRY LOCATION AT EXISTING BUILDING SHALL BE COORDINATED WITH OWNER AND SUBSTATION CONTRACTOR. SUBSTATION CONTRACTOR WILL EXTEND 3" CONDUIT UP THE EXTERIOR OF THE EXISTING BUILDING AND WILL FURNISH AND INSTALL ENTRY INTO THE EXISTING BUILDING.

NORTH

N

0 40' 80'
SCALE IN FEET

P:\0423300\DWG\RECORD\WRC\CAD\WRC-C-240A.DWG

DGR ENGINEERING
ROCK RAPIDS, IOWA
(712) 472-2531

DATE	DRAWN BY	NO.	APPROVED BY	REVISION DESCRIPTION
06-20	KLV	0	PDK	CONFORMING TO CONSTRUCTION RECORDS

BLACK HILLS ENERGY

WEST RAPID CITY SUBSTATION

RACEWAY TO BEN FRENCH
69 KV BUILDING

DRAWN BY KLV DATE 02-20
APPROVED BY PDK DATE 02-20
DWG NO. WRC-C-240A REVISION NO. 0

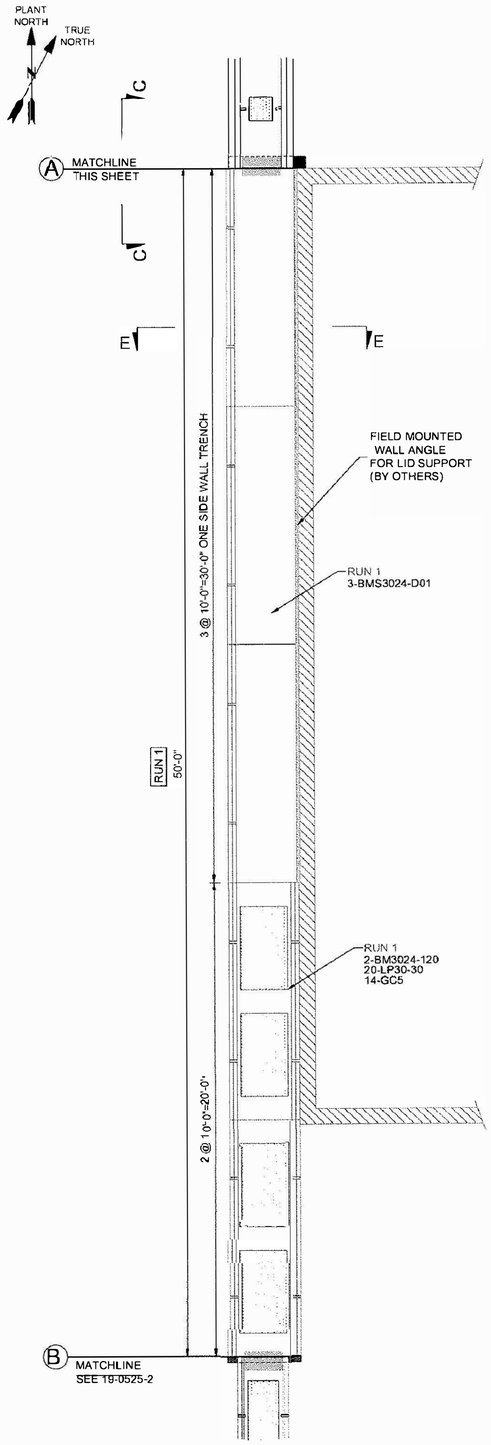

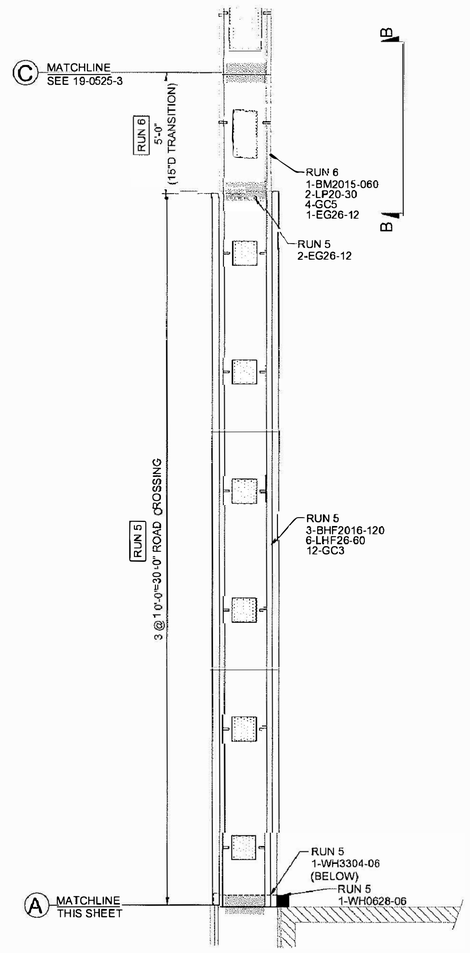

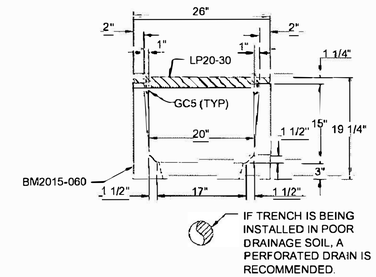

TYPICAL MULTI-DUTY SECTION
W/ PEDESTRIAN CONCRETE LID
20"W x 15"D
NOT TO SCALE

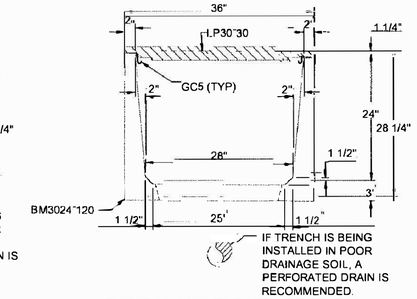

TYPICAL MULTI-DUTY SECTION
W/ PEDESTRIAN CONCRETE LID
30"W x 24"D
NOT TO SCALE

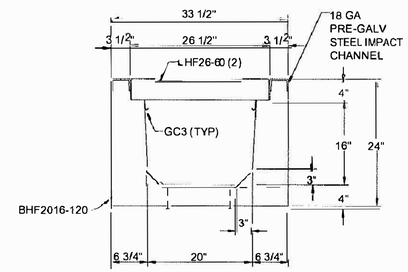

TYPICAL ROAD CROSSING
SECTION WITH FIBRELITE LID
20"W x 16"D
NOTTO SCALE

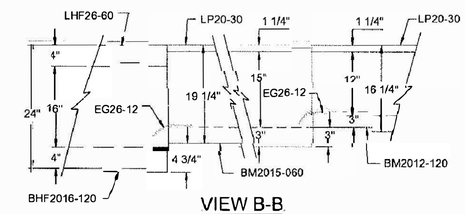

VIEW B-B
NOT TO SCALE

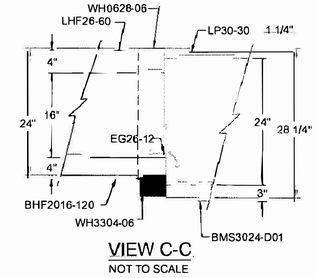

VIEW C-C
NOT TO SCALE

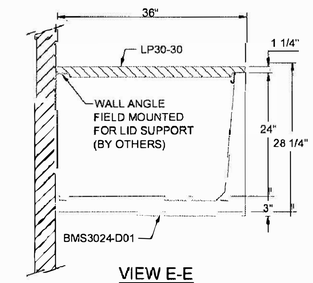

VIEW E-E
NOT TO SCALE

INDICATES OPENING IN TRENCH BOTTOM.

NOTES: LP LIDS (CONCRETE)

1. LID RATED FOR PEDESTRIAN LOADING ONLY.
2. PLAN VIEW AS DRAWN SHOWS LIDS REMOVED. DO NOT OVERLAP JOINTS WITH LIDS.
3. SALTS AND OTHER CORROSIVE DE-ICERS ARE NOT RECOMMENDED.

NOTES: MULTI-DUTY BASE

1. BASE RATED FOR ANSI TIER 15 LOADING. DO NOT DRIVE OVER TRENCH WITH HEAVIER LOADS.
2. COMPACT AREA AROUND WALLS TO ORIGINAL SOIL DENSITY USING WATER OR HAND COMPACTORS.
3. **FOR LIFTING BASES, USE CROSBY S-320N 3/4 TON HOOK OR EQUIVALENT.**
4. IF **GROUND CLIPS** ARE INCLUDED, FIELD INSTALL ACCORDING TO INSTRUCTIONS.

NOTES: HS20 ROAD CROSSING-FIBRELITE LIDS

1. ROAD CROSSING- LOAD CAPACITY OF THE SOIL BENEATH THE TRENCH SHALL BE 3,000 PSF MIN. IF WATER CONDITIONS OCCUR, THE SATURATED SOIL SHALL BE REPLACED WITH SAND AND GRAVEL AND COMPACTED TO 3,000 PSF MIN.
2. THE ROAD CROSSING TRENCH IS DESIGNED FOR H-20 32,000# AXLE LOAD WITH APPROPRIATE IMPACT FACTOR AND WILL HAVE FIBRELITE LIDS.
3. DO NOT OVERLAP JOINTS WITH LIDS.
4. IF **GROUND CLIPS** ARE INCLUDED, FIELD INSTALL ACCORDING TO INSTRUCTIONS.
5. FIBERLITE LIDS ARE NOT TO BE FIELD CUT OR MODIFIED IN ANY WAY AS THIS COMPROMISES THE STRUCTURAL INTEGRITY OF THE LID. IF FIELD MODIFICATION IS NECESSARY, CONTACT TRENWA FOR A REPAIR KIT.

DATE	BY	REVISION
5/9/19	CGB	PER CUSTOMER REQUEST

Trenwa
FIBERCAST TRENCH SOLUTIONS
1419 ALEXANDRIA PIKE
FORT THOMAS, KY 41075
859-781-0831

INSTALLATION INSTRUCTIONS

SCALE: 3/8" = 1'-0" DRAWN BY: CGB APPROVED BY KMB
DATE APRIL 30, 2019 ARCH D-SIZE DRAWING PLOT 1:1
BLACK HILLS ENERGY
WEST RAPID CITY
CABLE TRENCH LAYOUT
DRAWING NUMBER 19-0525-1

DATE	DRAWN BY	NO.	APPROVED BY	REVISION DESCRIPTION
06-20	KLV	0	PJK	CONFORMING TO CONSTRUCTION RECORDS

BLACK HILLS ENERGY
WEST RAPID CITY SUBSTATION
CABLE TRENCH LAYOUT

DRAWN BY KLV DATE 06-20
APPROVED BY PJK DATE 06-20
DWG NO. WRC-C-241A REVISION NO. 0

DGR ENGINEERING
ROCK RAPIDS, IOWA
(712) 472-2531

P:\0423300\DWG\RECORD\WRC\CAD\WRC-C-241A.DWG

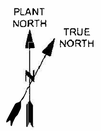

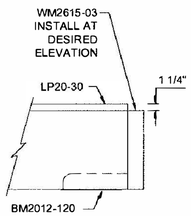

VIEW A-A
NOT TO SCALE

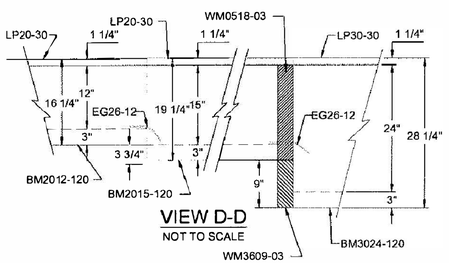

VIEW D-D
NOT TO SCALE

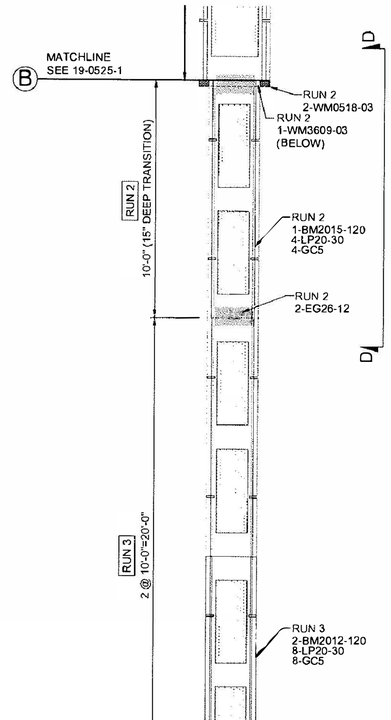

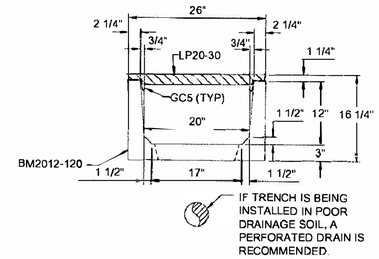

TYPICAL MULTI-DUTY SECTION
W/ PEDESTRIAN CONCRETE LID
20"W x 12"D
NOT TO SCALE

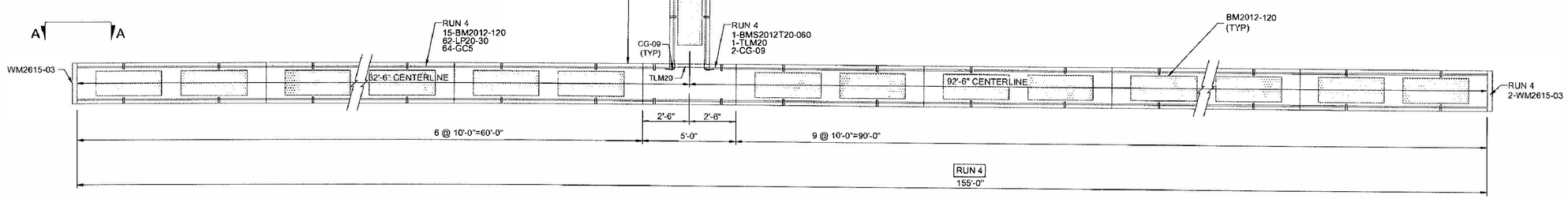

	DATE	BY	REVISION
△			

Trenwa
PRECAST TRENCH SOLUTIONS
1419 ALEXANDRIA PIKE
FORT THOMAS, KY 41075
859-781-0831

INSTALLATION
INSTRUCTIONS

SCALE: 3/8" = 1'-0"	DRAWN BY: CGB	APPROVED BY: KMB
DATE: APRIL 30, 2019	ARCH D-SIZE DRAWING	PLOT 1:1

BLACK HILLS ENERGY
WEST RAPID CITY

CABLE TRENCH LAYOUT — DRAWING NUMBER 19-0525-2

DATE	DRAWN BY	NO.	APPROVED BY	REVISION DESCRIPTION
06-20	KLV	0	PJK	CONFORMING TO CONSTRUCTION RECORDS

BLACK HILLS ENERGY
WEST RAPID CITY SUBSTATION

CABLE TRENCH LAYOUT

DRAWN BY KLV DATE 06-20
APPROVED BY PJK DATE 06-20
DWG NO. WRC-C-241B REVISION 0

DGR ENGINEERING
ROCK RAPIDS, IOWA
(712) 472-2531

P:\041233\00\DWG\RECORD\WRC\CAD\WRC-C-241B.DWG

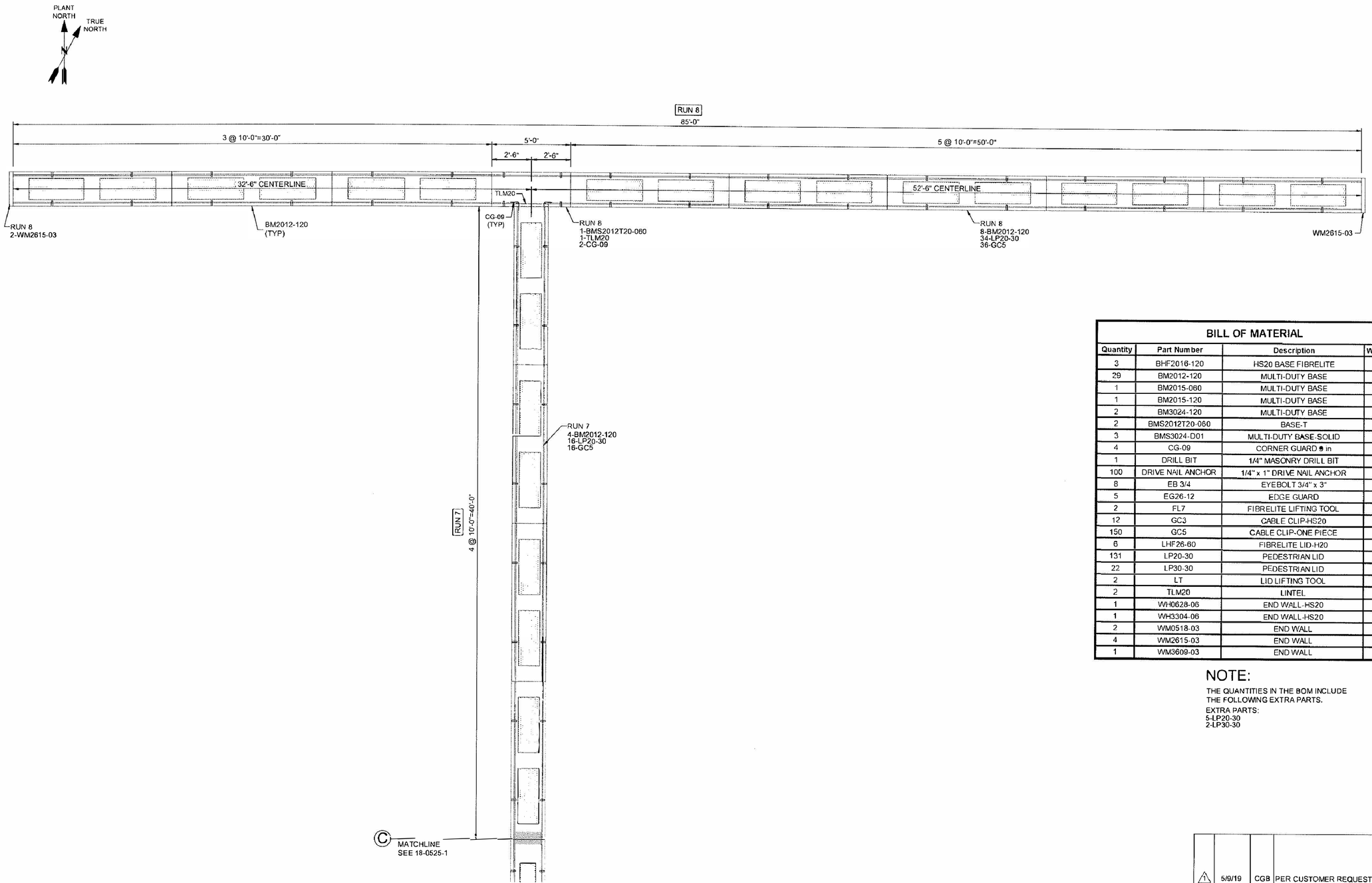

BILL OF MATERIAL

Quantity	Part Number	Description	Weight(lbs.)
3	BHF2016-120	HS20 BASE FIBRELITE	3747
29	BM2012-120	MULTI-DUTY BASE	1099
1	BM2015-060	MULTI-DUTY BASE	763
1	BM2015-120	MULTI-DUTY BASE	1251
2	BM3024-120	MULTI-DUTY BASE	2102
2	BMS2012T20-060	BASE-T	693
3	BMS3024-D01	MULTI-DUTY BASE-SOLID	2020
4	CG-09	CORNER GUARD 9 in	2
1	DRILL BIT	1/4" MASONRY DRILL BIT	0
100	DRIVE NAIL ANCHOR	1/4" x 1" DRIVE NAIL ANCHOR	0
8	EB 3/4	EYEBOLT 3/4" x 3"	1
5	EG26-12	EDGE GUARD	3
2	FL7	FIBRELITE LIFTING TOOL	5
12	GC3	CABLE CLIP-HS20	0
150	GC5	CABLE CLIP-ONE PIECE	0
6	LHF26-60	FIBRELITE LID-H20	68
131	LP20-30	PEDESTRIAN LID	65
22	LP30-30	PEDESTRIAN LID	95
2	LT	LID LIFTING TOOL	2
2	TLM20	LINTEL	8
1	WH0628-06	END WALL-HS20	88
1	WH3304-06	END WALL-HS20	69
2	WM0518-03	END WALL	23
4	WM2615-03	END WALL	102
1	WM3609-03	END WALL	84

NOTE:

THE QUANTITIES IN THE BOM INCLUDE THE FOLLOWING EXTRA PARTS.

EXTRA PARTS:
5-LP20-30
2-LP30-30

	DATE	BY	REVISION
1	5/9/19	CGB	PER CUSTOMER REQUEST

Trenwa PRECAST TRENCH SOLUTIONS
1419 ALEXANDRIA PIKE
FORT THOMAS, KY 41075
859-781-0831

INSTALLATION INSTRUCTIONS

SCALE: 3/8" = 1'-0" | DRAWN BY: CGB | APPROVED BY: KMB
DATE: APRIL 30, 2019 | ARCH D-SIZE DRAWING | PLOT 1:1

BLACK HILLS ENERGY
WEST RAPID CITY

CABLE TRENCH LAYOUT

DRAWING NUMBER 19-0525-3

DATE	DRAWN BY	NO.	APPROVED BY	REVISION DESCRIPTION
06-20	KLV	0	PDK	CONFORMING TO CONSTRUCTION RECORDS

BLACK HILLS ENERGY
WEST RAPID CITY SUBSTATION

CABLE TRENCH LAYOUT

DRAWN BY KLV DATE 06-20
APPROVED BY PDK DATE 06-20
DWG NO. WRC-C-241C REVISION 0

DGR ENGINEERING
ROCK RAPIDS, IOWA
(712) 472-2531

P:\04\233\00\DWG\RECORD\WRC\CAD\WRC-C-241C.DWG

BELOW-GRADE CONDUIT LIST

CONDUIT #	SIZE	TO	FROM
C01	4"	CB 23461	CABLE TRENCH
C02	4"	CB 23464	CABLE TRENCH
C03	4"	CB 23467	CABLE TRENCH
C04	4"	CB 23470	CABLE TRENCH
C05	4"	CB 6WR01	CABLE TRENCH
C06	4"	CB 6WR04	CABLE TRENCH
C07	4"	CB 6WR07	CABLE TRENCH
C08	4"	CB 6WR10	CABLE TRENCH
C09	4"	CB 6WR13	CABLE TRENCH
C10	4"	CB 6WR16	CABLE TRENCH
C11	4"		
C12	4"		
C13	4"		
C14	4"	XFMR T1	CABLE TRENCH
C15	4"	XFMR T1	CABLE TRENCH
C16	4"		
C17	4"		
C18	4"		
C19	4"	PPT	CTRL ENCL
C20	4"	CTRL ENCL	OUTSIDE FENCE
C21	2"	LNG CVT	CABLE TRENCH
C22	2"	SRC CVT	CABLE TRENCH
C23	2"	BUS T1 CVT	CABLE TRENCH
C24	2"	FUTURE BUS T2 CVT	CABLE TRENCH
C25	2"	BUS 1 PT	CABLE TRENCH
C26	2"	BUS 2 PT	CABLE TRENCH
C27	2"	LNG3 PT	CABLE TRENCH
C28	2"	CT4 PT	CABLE TRENCH
C29	2"	BF1 PT	CABLE TRENCH
C30	2"	BF2 PT	CABLE TRENCH
C31	2"		
C32	2"		
C33	2"	LNG OPGW	CABLE TRENCH
C34	2"	SRC OPGW	CABLE TRENCH
C35	2"	LNG3 OPGW	CABLE TRENCH
C36	2"	CT4 OPGW	CABLE TRENCH
C37	2"	BF1 OPGW	CABLE TRENCH
C38	2"	BF2 OPGW	CABLE TRENCH
C39	2"		
C40	2"	RECPT 1	CABLE TRENCH
C41	2"	RECPT 2	CABLE TRENCH
C42	2"	SW 23474	CABLE TRENCH
C43	2"	SW 23475	CABLE TRENCH
C44	2"	SW 6WR18	CABLE TRENCH
C45	2"	SW 6WR19	CABLE TRENCH
C46	2"	SW 6WR20	CABLE TRENCH
C47	2"	SW 6WR21	CABLE TRENCH
C48	2"	YL J-BOX 1 (YL1)	CABLE TRENCH
C49	2"	YL J-BOX 2 (YL2)	CABLE TRENCH
C50	2"	YL J-BOX 3 (YL3)	CABLE TRENCH

BELOW-GRADE CONDUIT LIST

CONDUIT #	SIZE	TO	FROM
C51	2"	YL J-BOX 4 (YL4)	CABLE TRENCH
C52	2"	YL J-BOX 5 (YL5)	CABLE TRENCH
C53	2"	YL J-BOX 6 (YL6)	CABLE TRENCH
C54	2"	YL J-BOX 7 (YL7)	CABLE TRENCH
C55	2"	YL J-BOX 8 (YL8)	CABLE TRENCH
C56	2"	YL J-BOX 9 (YL9)	CABLE TRENCH
C57	2"	YL J-BOX 10 (YL10)	CABLE TRENCH
C58	2"	YL J-BOX 11 (YL11)	CABLE TRENCH
C59	2"	YL J-BOX 12 (YL12)	CABLE TRENCH
C60	2"	YL J-BOX 13 (YL13)	CABLE TRENCH
C61	2"	YL J-BOX 14 (YL14)	CABLE TRENCH
C62	2"	YL J-BOX 15 (YL15)	CABLE TRENCH
C63	2"	YL J-BOX 16 (YL16)	CABLE TRENCH
C64	2"	FUT. YL TO SM1	CABLE TRENCH
C65	2"	SPARE TO LAF	CABLE TRENCH
C66	2"	SPARE TO LAF	CABLE TRENCH
C67	2"	SPARE TO LAF	CABLE TRENCH
C68	2"	SPARE TO LAF	CABLE TRENCH
C69	2"	SPARE TO LAF	CABLE TRENCH
C70	2"	SPARE TO LAF	CABLE TRENCH
C71	2"	FUT. SECURITY (FENCE)	CABLE TRENCH
C72	2"	FUT. SECURITY (FENCE)	CABLE TRENCH
C73	2"	FUT. SECURITY (FENCE)	CABLE TRENCH
C74	2"	FUT. SECURITY (FENCE)	CABLE TRENCH
C75	2"	FUT. SECURITY (FENCE)	CABLE TRENCH
C76	2"	FUT. SECURITY (FENCE)	CABLE TRENCH
C77	2"	FUT. SECURITY (FENCE)	CABLE TRENCH
C78	2"	FUT. SECURITY (FENCE)	CABLE TRENCH
C79	2"		
C80	2"		
C81	1-1/2"	LNG A0 CVT	LNG B0 CVT
C82	1-1/2"	LNG C0 CVT	LNG B0 CVT
C83	1-1/2"	SRC A0 CVT	SRC B0 CVT
C84	1-1/2"	SRC C0 CVT	SRC B0 CVT
C85	1-1/2"	LNG3 A0 PT	LNG3 B0 PT
C86	1-1/2"	LNG3 C0 PT	LNG3 B0 PT
C87	1-1/2"	CT4 A0 PT	CT4 B0 PT
C88	1-1/2"	CT4 C0 PT	CT4 B0 PT
C89	1-1/2"	BF1 A0 PT	BF1 B0 PT
C90	1-1/2"	BF1 C0 PT	BF1 B0 PT
C91	1-1/2"	BF2 A0 PT	BF2 B0 PT
C92	1-1/2"	BF2 C0 PT	BF2 B0 PT
C93	1-1/2"	SW 6WR22	CABLE TRENCH
C94	1-1/2"		
C95	1-1/2"		
C96	1-1/2"		
C97	1-1/2"		
C98	1-1/2"		
C99	1-1/2"		
C100	1-1/2"		
C101	3"	BEN FRENCH 69 kV BUILDING	CABLE TRENCH

P:\04233\00\DWG\RECORD\WRC\CAD\WRC-C-242.DWG

DGR ENGINEERING
ROCK RAPIDS, IOWA
(712) 472-2531

DATE	DRAWN BY	NO.	APPROVED BY	REVISION DESCRIPTION
06-20	KLV	1	PDK	CONFORMING TO CONSTRUCTION RECORDS
01-19	KLV	0	PDK	FOR CONSTRUCTION

BLACK HILLS ENERGY

WEST RAPID CITY SUBSTATION

BELOW-GRADE CONDUIT LIST

DRAWN BY KLV DATE 08-18
APPROVED BY PDK DATE 08-18
DWG NO. WRC-C-242 REVISION NO. 1

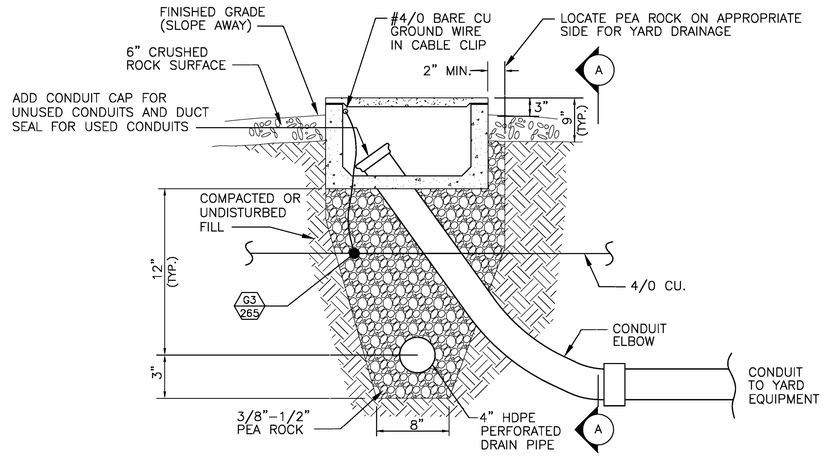

END VIEW

DETAIL C1
CABLE TRENCH WITH DRAIN PIPE DETAIL

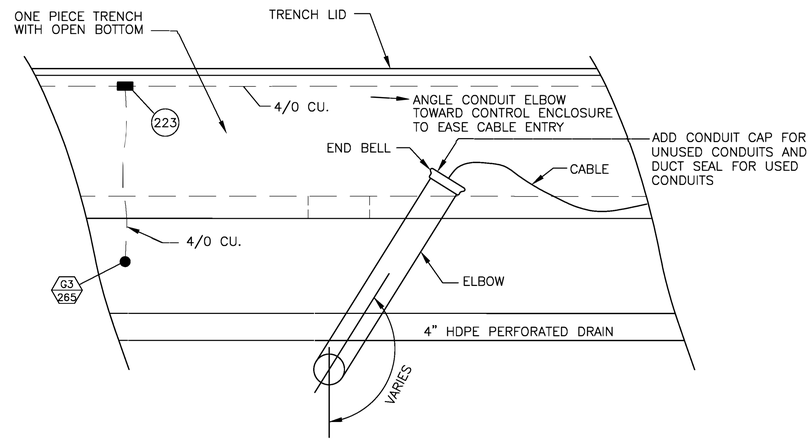

SECTION A–A

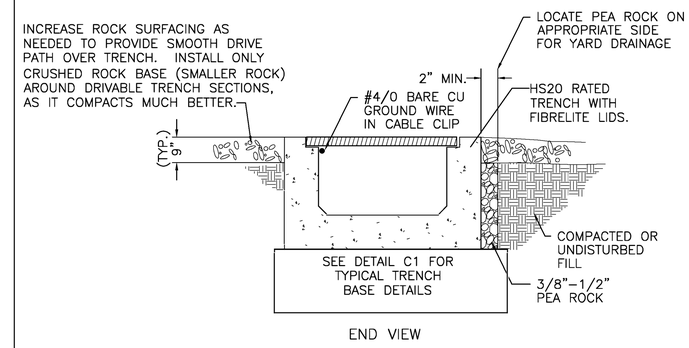

END VIEW

DETAIL C2
CABLE TRENCH ROAD CROSSING DETAIL

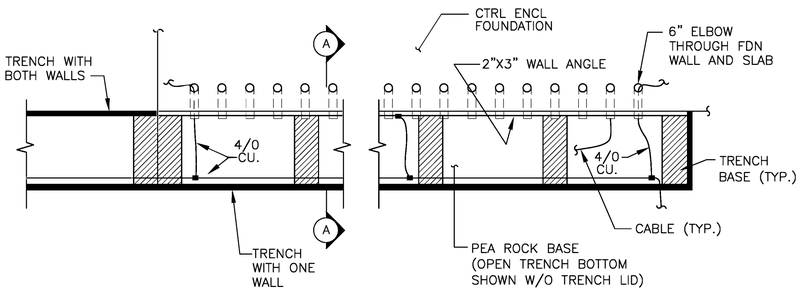

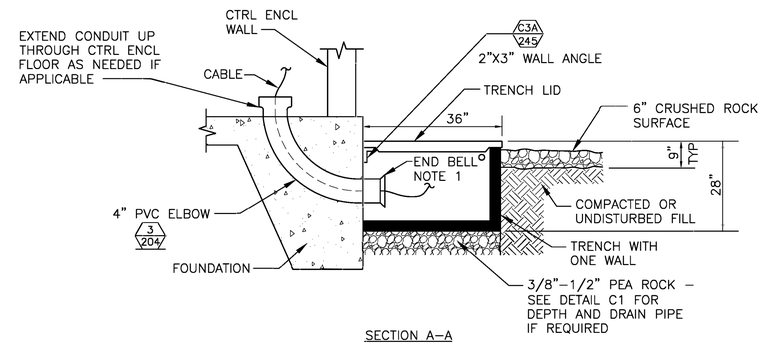

SECTION A–A

NOTES
1. CUT PVC ELBOWS AS NEEDED AND INSTALL END BELL. SEE FOUNDATION DETAILS FOR EXACT LOCATION OF CONDUITS.

DETAIL C3
CONTROL ENCLOSURE CONDUIT INTERFACE DETAIL

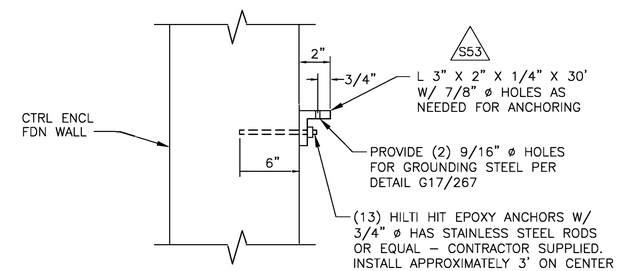

DETAIL C3A
TRENCH LID SUPPORT ANGLE

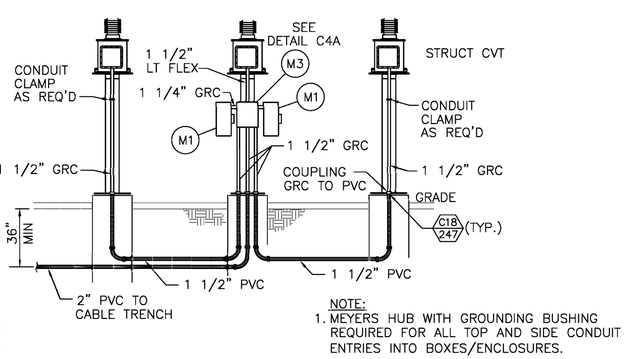

NOTE:
1. MEYERS HUB WITH GROUNDING BUSHING REQUIRED FOR ALL TOP AND SIDE CONDUIT ENTRIES INTO BOXES/ENCLOSURES.

DETAIL C4 (6 REQ'D)
3ø CVT/PT CONDUIT DETAIL

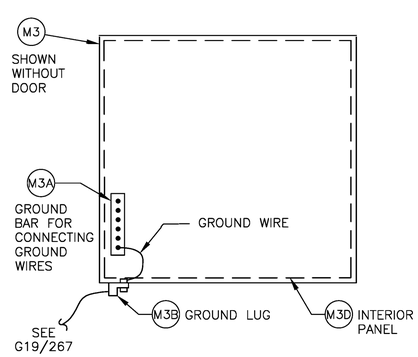

DETAIL C4A
CVT/PT J–BOX DETAILS

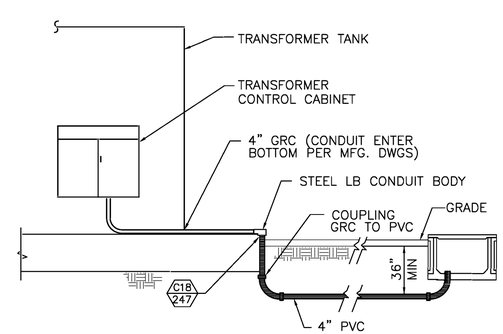

DETAIL C5 (2 REQ'D)
CONDUIT OVER PAD TO CABINET (XFMR) DETAIL

P:\04233\00\DWG\RECORD\WRC\CAD\WRC-C-245.DWG

DGR ENGINEERING
ROCK RAPIDS, IOWA
(712) 472-2531

DATE	DRAWN BY	NO.	APPROVED BY	REVISION DESCRIPTION
06-20	KLV	2	PDK	CONFORMING TO CONSTRUCTION RECORDS
10-19	KLV	1	PDK	REVISED DETAIL C3A
01-19	KLV	0	PDK	FOR CONSTRUCTION

BLACK HILLS ENERGY
WEST RAPID CITY SUBSTATION
CONDUIT AND TRENCH DETAILS

DRAWN BY KLV DATE 10-18
APPROVED BY PDK DATE 10-18
DWG NO. WRC-C-245
REVISION NO. 2

NOTE:
1. MEYERS HUB WITH GROUNDING BUSHING REQUIRED FOR ALL TOP AND SIDE CONDUIT ENTRIES INTO BOXES/ENCLOSURES.

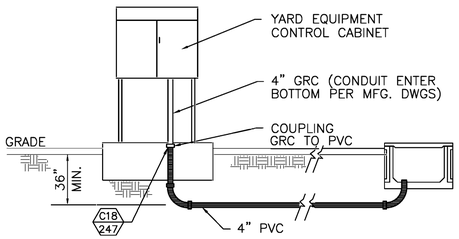

DETAIL C6 (9 REQ'D)
CONDUIT TO CABINET (BKR) DETAIL

NOTE:
1. MEYERS HUB WITH GROUNDING BUSHING REQUIRED FOR ALL TOP AND SIDE CONDUIT ENTRIES INTO BOXES/ENCLOSURES.

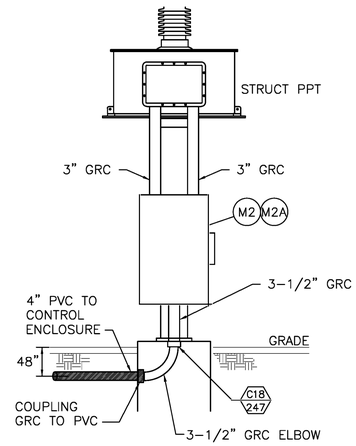

DETAIL C7 (1 REQ'D)
69 KV POWER PT SECONDARY DISCONNECT CONDUIT DETAIL

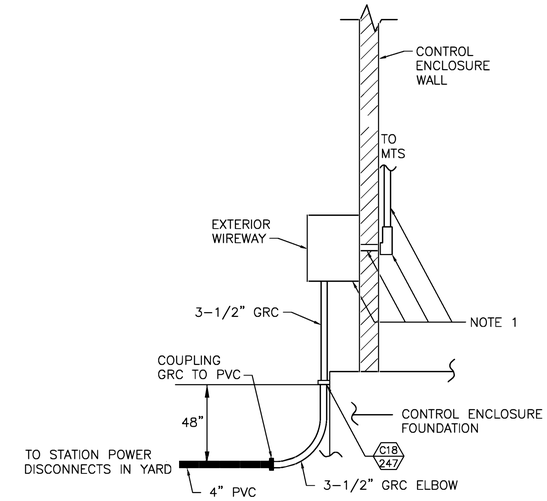

NOTES
1. ENTRANCE THROUGH CONTROL ENCLOSURE WALL, EXTERIOR WIREWAY, AND RACEWAY INSIDE CONTROL ENCLOSURE FROM WALL ENTRANCE TO TRANSFER SWITCH WILL BE INSTALLED BY CONTROL ENCLOSURE MANUFACTURER. CABLE INSTALLATION TO TRANSFER SWITCH WILL BE INSTALLED BY CONTRACTOR.

DETAIL C8 (2 REQ'D)
CONTROL ENCLOSURE STATION POWER ENTRANCE

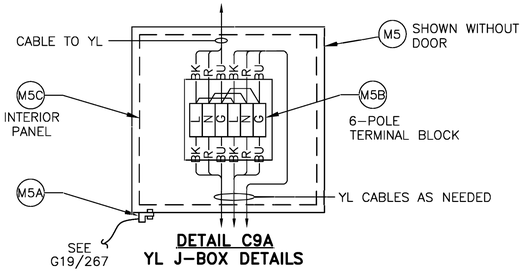

DETAIL C9A
YL J-BOX DETAILS

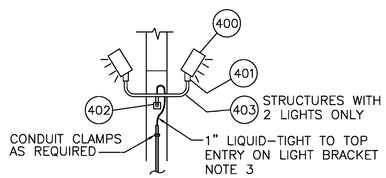

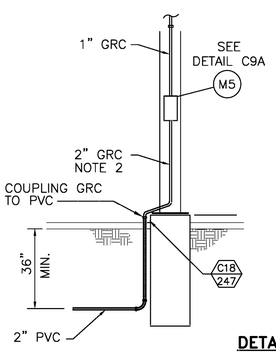

OR

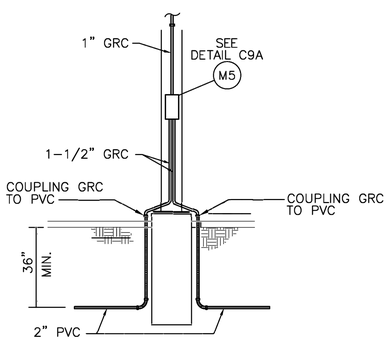

DETAIL C9 (16 REQ'D)
YARD LIGHT CONDUIT DETAIL

NOTES
1. MEYERS HUB WITH GROUNDING BUSHING REQUIRED ON ALL TOP AND SIDE CONDUIT ENTRIES INTO BOXES/ENCLOSURES.
2. 2" GRC IS NEEDED AT YL J-BOX LOCATIONS WITH ONLY ONE CONDUIT RISER TO ACCOMMODATE TWO OR THREE LIGHTING CABLES.
3. LOOP LIQUID-TIGHT CONDUIT UP TO TOP ENTRY ON LIGHT BRACKET TO ACT AS A WEATHERHEAD PREVENTING WATER FROM RUNNING INTO JUNCTION BOX BELOW. FIELD-DRILL 1/4" HOLE IN BOTTOM OF LIGHT BRACKET TO ALLOW WATER TO ESCAPE. DO NOT LEAVE CONDUIT ENTRIES OPEN, AS THESE COULD INTRODUCE AN AREA FOR BIRDS' NESTS.

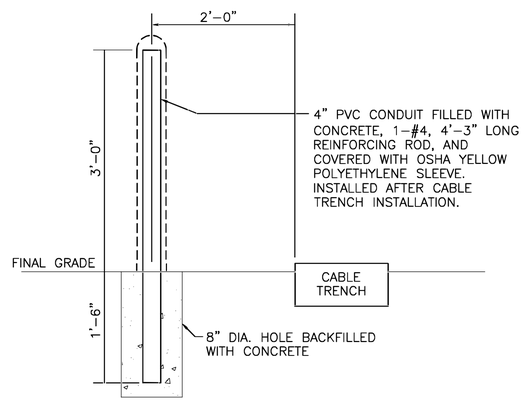

DETAIL C10 (37 REQ'D)
SAFETY BOLLARD DETAIL

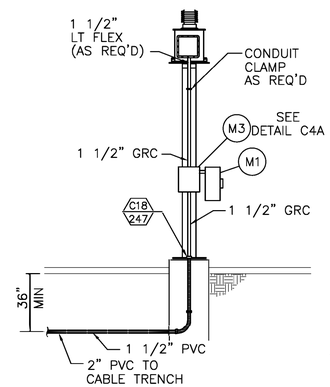

NOTE:
1. MEYERS HUB WITH GROUNDING BUSHING REQUIRED FOR ALL TOP AND SIDE CONDUIT ENTRIES INTO BOXES/ENCLOSURES.

DETAIL C11 (3 REQ'D)
1ø CVT/PT/PPT (METER WDG.) CONDUIT DETAIL

DATE	DRAWN BY	NO.	APPROVED BY	REVISION DESCRIPTION
06-20	KLV	2	PDK	CONFORMING TO CONSTRUCTION RECORDS
10-19	KLV	1	PDK	REVISED DETAIL C9
01-19	KLV	0	PDK	FOR CONSTRUCTION

BLACK HILLS ENERGY
WEST RAPID CITY SUBSTATION
CONDUIT AND TRENCH DETAILS

DRAWN BY KLV DATE 10-18
APPROVED BY PDK DATE 10-18
DWG NO. WRC-C-246 REVISED 2 BY

DGR ENGINEERING
ROCK RAPIDS, IOWA
(712) 472-2531

P:\041233\00\DWG\RECORD\WRC\CAD\WRC-C-246.DWG

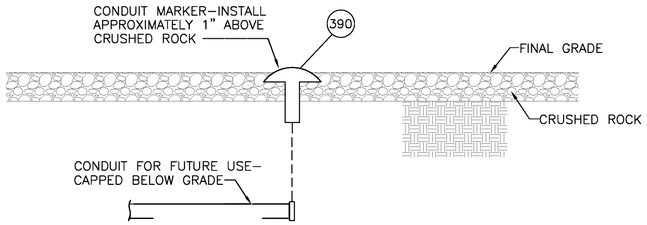

DETAIL C12 (9 REQ'D)
CONDUIT MARKER DETAIL

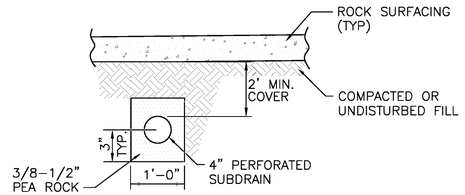

DETAIL C13
CABLE TRENCH SUBDRAIN

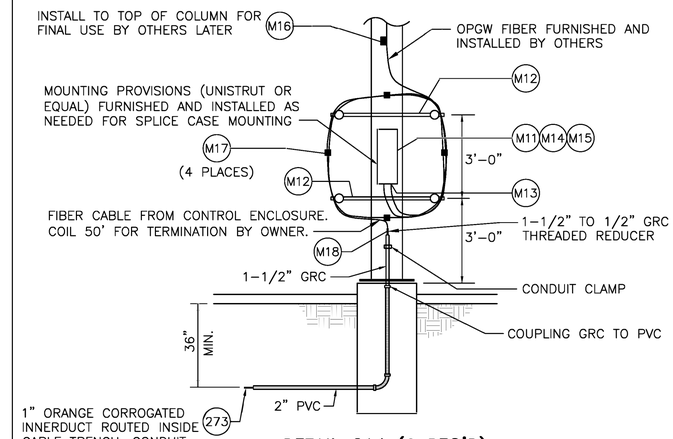

DETAIL C14 (6 REQ'D)
OPGW SPLICE CASE CONDUIT DETAIL

AT 230 kV YARD **AT 69 kV YARD**

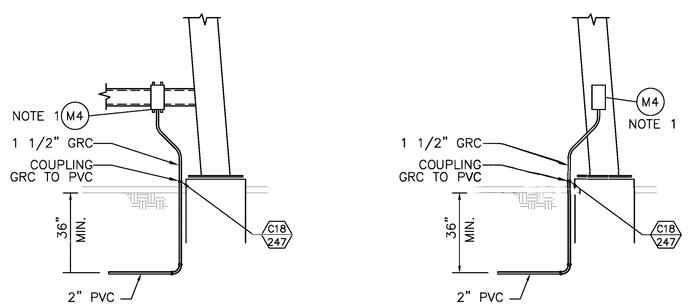

NOTE:
1. MEYERS HUB WITH GROUNDING BUSHING REQUIRED FOR ALL TOP AND SIDE CONDUIT ENTRIES INTO BOXES/ENCLOSURES.

DETAIL C15 (2 REQ'D)
YARD RECEPTACLE CONDUIT DETAIL

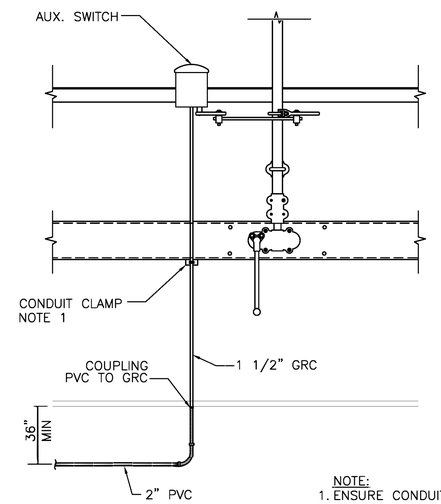

NOTE:
1. ENSURE CONDUIT CLAMP IS TIGHT TO PREVENT DIFFERENTIAL MOVEMENT BETWEEN CONDUIT AND STEEL SO THAT AUX. SWITCH ALIGNMENT IS NOT AFFECTED.

DETAIL C16 (6 REQ'D)
GOAB AUXILIARY SWITCH CONDUIT DETAIL

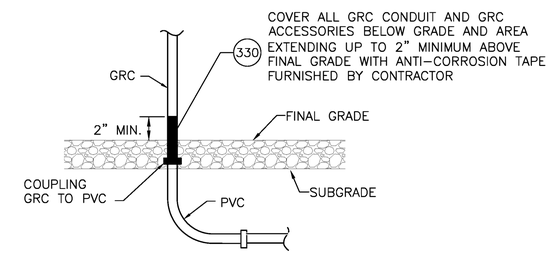

DETAIL C17
ANTI–CORROSION TAPE

NOTES:
1. CONDUIT RISERS AT ALL FOUNDATIONS SHALL BE ANCHORED TO THE FOUNDATIONS USING UNISTRUT AND CLAMPS OR SIMILAR SYSTEM APPROVED BY OWNER.

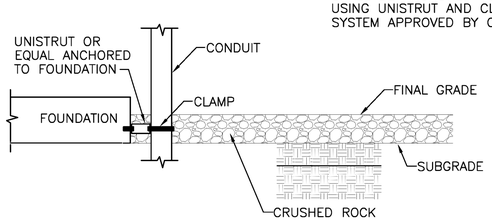

DETAIL C18
ANCHOR TO FDN

P:\041233\00\DWG\RECORD\WRC\CAD\WRC-C-247.DWG

DGR ENGINEERING
ROCK RAPIDS, IOWA
(712) 472-2531

DATE	DRAWN BY	NO.	APPROVED BY	REVISION DESCRIPTION
06-20	KLV	1	PDK	CONFORMING TO CONSTRUCTION RECORDS
01-19	KLV	0	PDK	FOR CONSTRUCTION

BLACK HILLS ENERGY

WEST RAPID CITY SUBSTATION

CONDUIT AND TRENCH DETAILS

DRAWN BY KLV DATE 10-18
APPROVED BY PDK DATE 10-18
DWG NO. WRC-C-247 REVISION 1

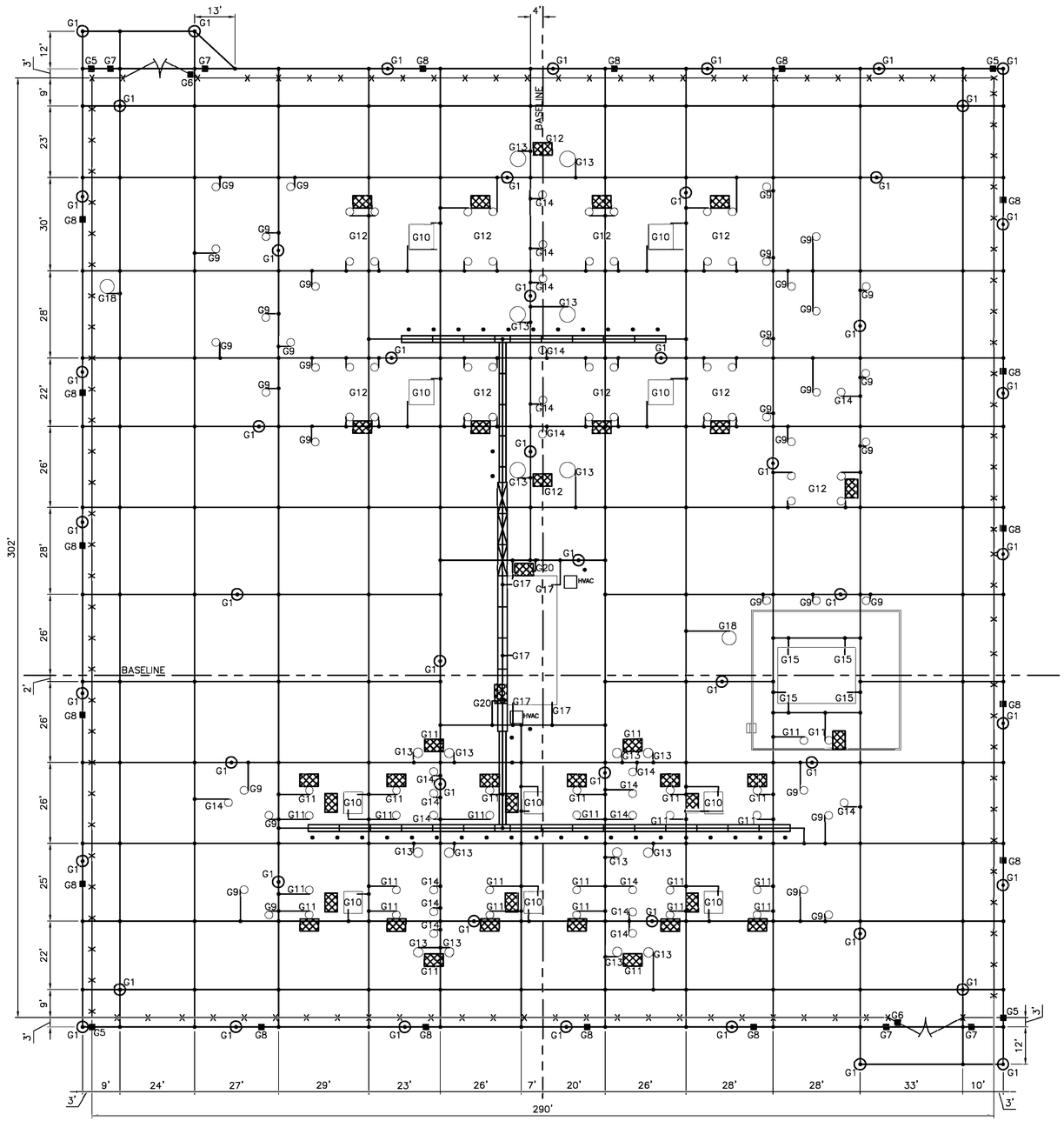

LEGEND:

○ ○	FOUNDATIONS
⊠	CABLE TRENCH DRIVE SECTION (HS20 RATED) WITH FIBRELITE LIDS
▭	CABLE TRENCH PEDESTRIAN SECTION WITH CONCRETE LIDS
⊠	OPERATOR PLATFORM
—x—x—	CHAINLINK FENCE
———	4/0 COPPER CONCENTRIC STRAND
⊙ G1	3/4"x20' COPPER CLAD GROUND ROD AND DETAIL NUMBER (SPLICE (2) 10' RODS)
┼	TEE GROUNDING CONNECTION DETAIL NUMBER G2 & C1/245
┼	"X"(CROSS) GROUNDING CONNECTION DETAIL NUMBER G2, C1/245
■G5	FENCE/GATE GROUNDING CONNECTION AND DETAIL NUMBER (G5, G6, G7, OR G8)
G14	GROUNDING CONNECTION DETAIL NUMBER, SEE DRAWINGS C-265 THRU C-268 FOR DETAILS.

NOTES:

1. GROUND GRID TO BE A MINIMUM 1'-6" BELOW FINISHED GRADE.
2. GROUND CONDUCTOR WILL BE ROUTED INSIDE THE ENTIRE LENGTH OF CABLE TRENCH (SEE DETAIL C1/245). GROUND CONDUCTORS ROUTED IN THE CABLE TRENCH SHALL BE CONNECTED TO THE MAIN GRID AT EACH INTERSECTION POINT PER THIS DETAIL.

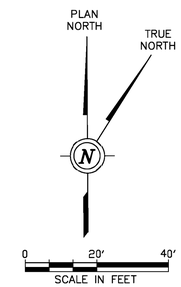

P:\04233\00\DWG\RECORD\WRC\CAD\WRC-C-260.DWG

DGR ENGINEERING
ROCK RAPIDS, IOWA
(712) 472-2531

DATE	DRAWN BY	NO.	APPROVED BY	REVISION DESCRIPTION
06-20	KLV	1	PDK	CONFORMING TO CONSTRUCTION RECORDS
01-19	KLV	0	PDK	FOR CONSTRUCTION

BLACK HILLS ENERGY

WEST RAPID CITY SUBSTATION

GROUNDING PLAN

DRAWN BY KLV DATE 11-18
APPROVED BY PDK DATE 11-18
DWG NO. WRC-C-260 REVISION NO. 1

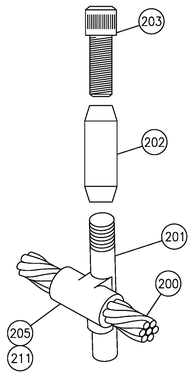

DETAIL G1
4/0 COPPER TO 3/4" GROUND ROD

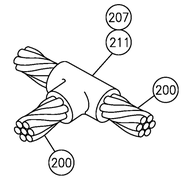

DETAIL G2
4/0 COPPER TO 4/0 COPPER TEE

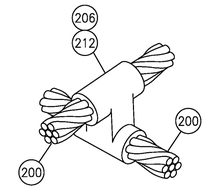

DETAIL G3
4/0 COPPER TO 4/0 COPPER CROSS

NOTES ON EXOTHERMIC CONNECTIONS:

1. ENSURE THAT THE APPROPRIATE SIZE WELD IS USED FOR EACH MOLD.
2. SUPPLY APPROPRIATE TOOLS AS NEEDED TO COMPLETE THE CONNECTIONS.
3. FOLLOW ALL MANUFACTURER'S INSTRUCTIONS FOR COMPLETING EXOTHERMIC CONNECTIONS INCLUDING, BUT NOT LIMITED TO, THE FOLLOWING: PRE-HEATING MOLDS PRIOR TO MAKING CONNECTIONS, BRIGHT CLEANING STRANDED CONDUCTORS WITH WIRE BRUSH, BRIGHT CLEANING SOLID CONDUCTOR WITH EMERY CLOTH, AND MAINTAINING AND CLEANING MOLDS.
4. MOLDS SHALL BE USED ON A MAXIMUM OF 25 CONNECTIONS. MOLDS USED FOR 25 OR MORE CONNECTIONS SHALL BE DISCARDED.

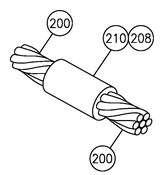

DETAIL G4
4/0 COPPER TO 4/0 COPPER SPLICE

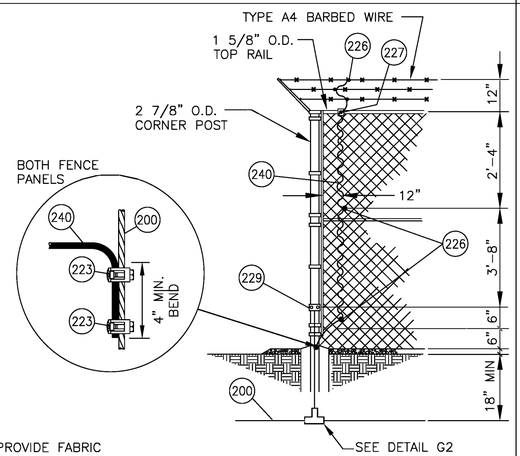

* PROVIDE FABRIC GROUND ON BOTH SIDES OF CORNER POST.

DETAIL G5
FENCE CORNER POST

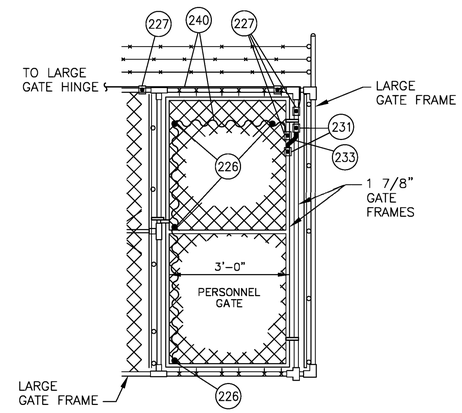

DETAIL G6
PERSONNEL GATE

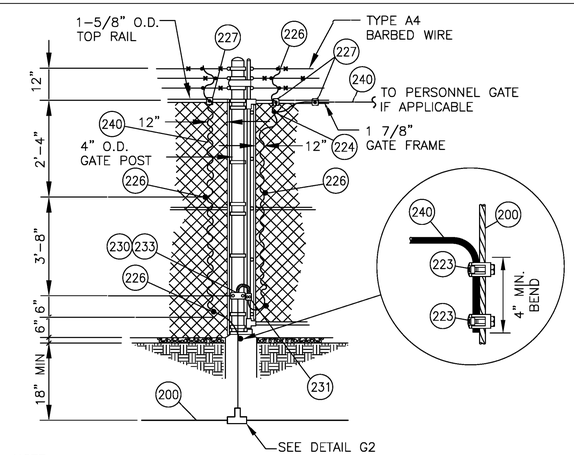

NOTE:
TYPICAL BOTH GATE HINGES

DETAIL G7
LARGE GATE

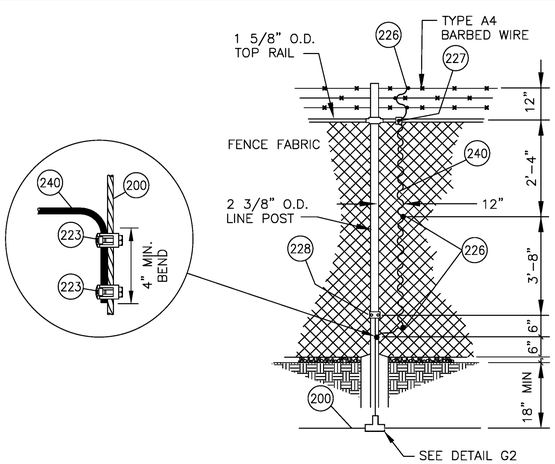

DETAIL G8
FENCE LINE POST

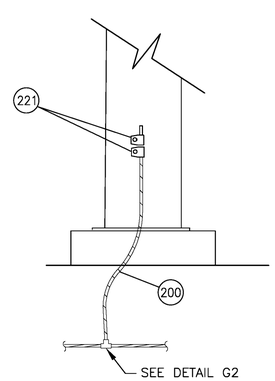

DETAIL G9
4/0 COPPER TO FLAT SURFACE

NOTES

1. 4/0 CONDUCTOR CONNECTING GROUND PLATFORM SHALL BE VISIBLE (ABOVE GRADE).

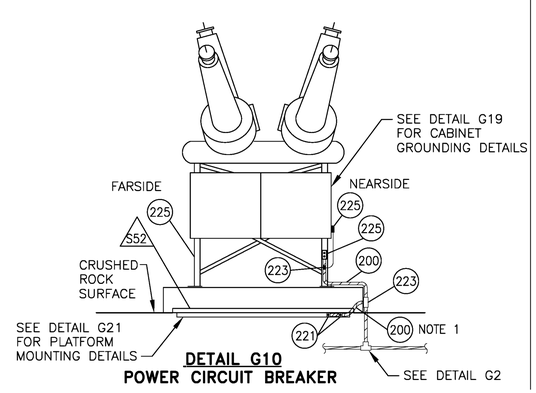

DETAIL G10
POWER CIRCUIT BREAKER

P:\04023\00\DWG\RECORD\WRC\CAD\WRC-C-265.DWG

DGR ENGINEERING
ROCK RAPIDS, IOWA
(712) 472-2531

DATE	DRAWN BY	NO.	APPROVED BY	REVISION DESCRIPTION
06-20	KLV	1	PDK	CONFORMING TO CONSTRUCTION RECORDS
01-19	KLV	0	PDK	FOR CONSTRUCTION

BLACK HILLS ENERGY

WEST RAPID CITY SUBSTATION

GROUNDING DETAILS

DRAWN BY KLV DATE 10-18
APPROVED BY PDK DATE 10-18
DWG NO. WRC-C-265 REVISION 1

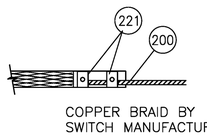

DETAIL G11–1

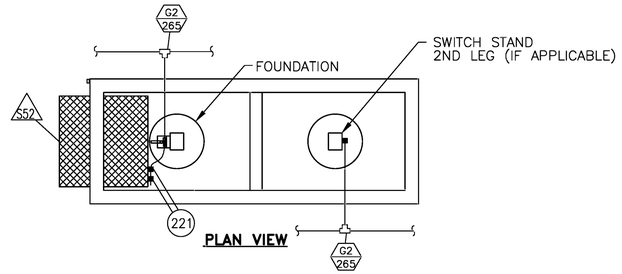

PLAN VIEW

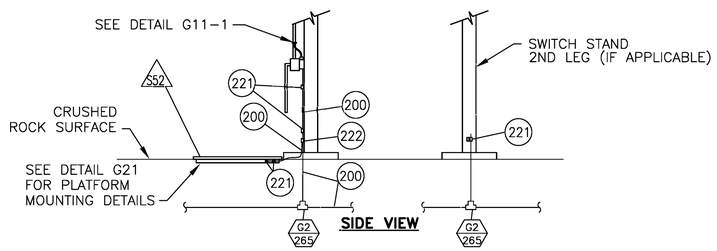

SIDE VIEW

DETAIL G11
69kV GOAB
SWITCH GROUNDING

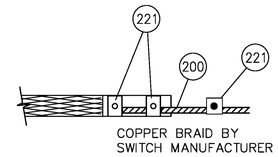

DETAIL G12–1

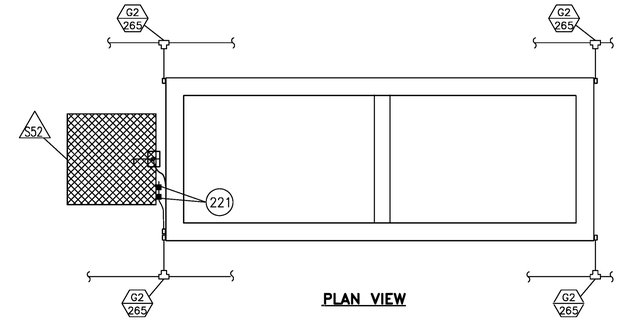

PLAN VIEW

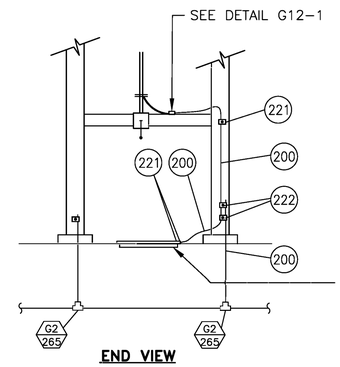

END VIEW

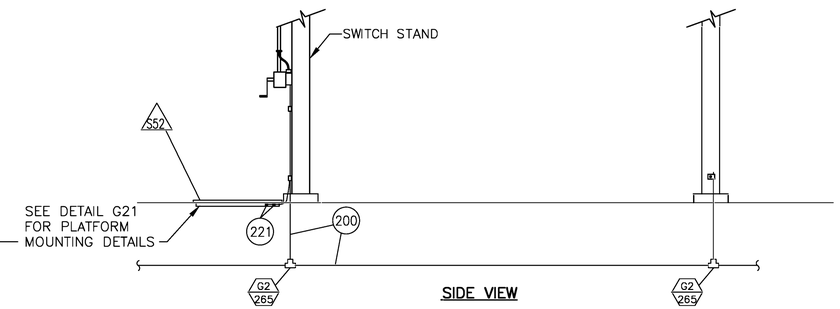

SIDE VIEW

DETAIL G12
230kV GOAB SWITCH GROUNDING

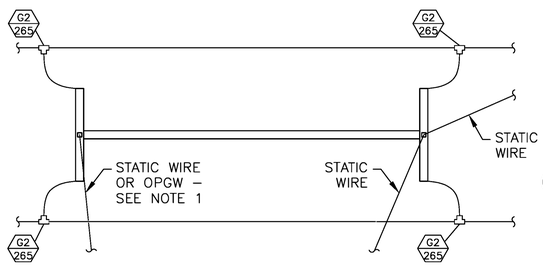

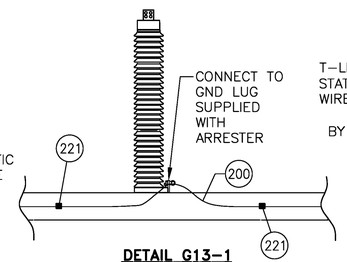

DETAIL G13–1
ARRESTER GROUNDING

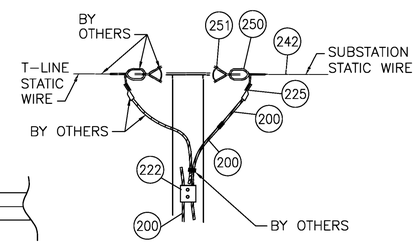

DETAIL G13–2
STATIC WIRE GROUNDING

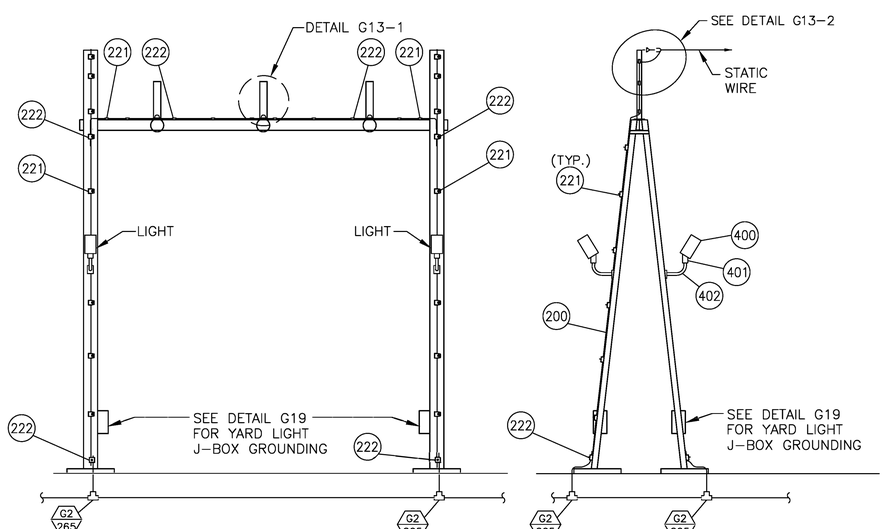

DETAIL G13
A–FRAME GROUNDING

NOTES:
1. OPGW WIRE GROUNDING CONNECTION (IF APPLICABLE) TO 4/0 CONDUCTOR ROUTED TO THE TOP OF THE STRUCTURE SHALL BE COMPLETED BY OTHERS. OPGW DOWNLEAD TO THE SPLICE CASE WILL ALSO BE COMPLETED BY OTHERS, BUT CONTRACTOR SHALL INSTALL OPGW DOWNLEAD CLAMPS ON STRUCTURE FOR FINAL USE BY OTHERS.

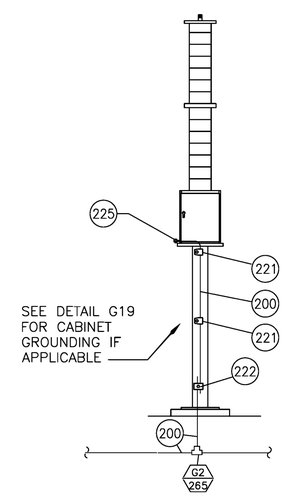

DETAIL G14
CVT/PT/PPT

P:\04233\001\DWG\RECORD\WRC\CAD\WRC-C-266.DWG

DGR ENGINEERING
ROCK RAPIDS, IOWA
(712) 472-2531

DATE	DRAWN BY	NO.	APPROVED BY	REVISION DESCRIPTION
06-20	KLV	1	PDK	CONFORMING TO CONSTRUCTION RECORDS
01-19	KLV	0	PDK	FOR CONSTRUCTION

BLACK HILLS ENERGY
WEST RAPID CITY SUBSTATION
GROUNDING DETAILS

DRAWN BY KLV DATE 10-18
APPROVED BY PDK DATE 10-18
DWG NO. WRC-C-266 REVISION 1

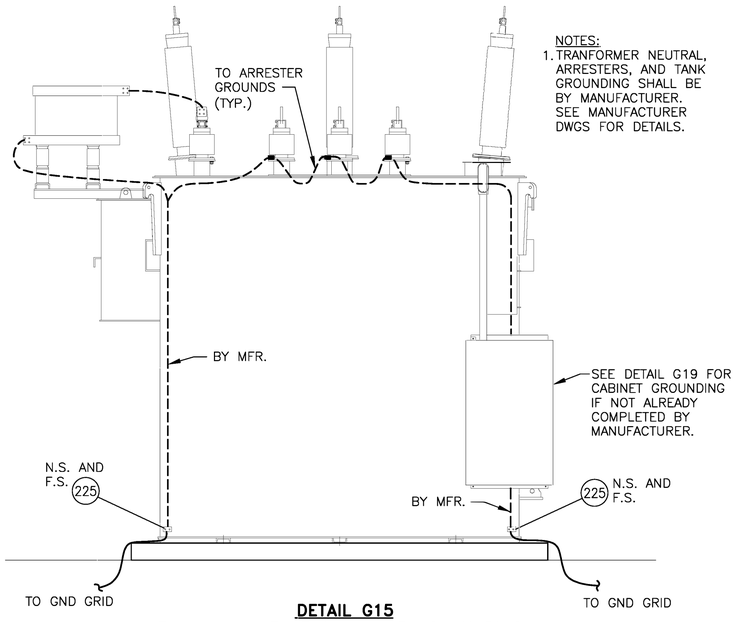

NOTES:
1. TRANFORMER NEUTRAL, ARRESTERS, AND TANK GROUNDING SHALL BE BY MANUFACTURER. SEE MANUFACTURER DWGS FOR DETAILS.

DETAIL G15
TYPICAL POWER TRANSFORMER GROUNDING

DETAIL G16
NOT USED

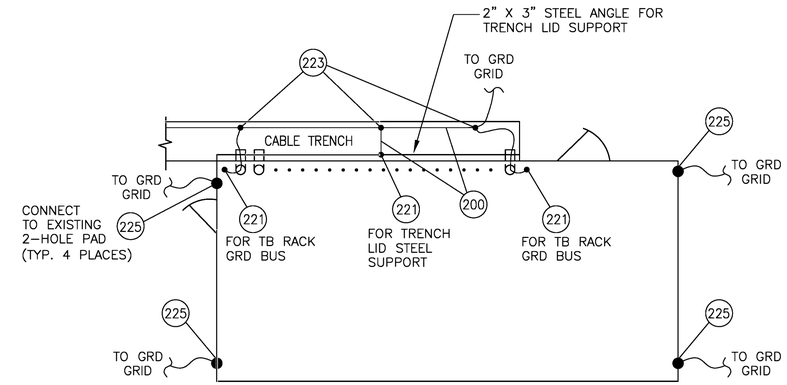

DETAIL G17
TYPICAL CONTROL ENCLOSURE GROUNDING

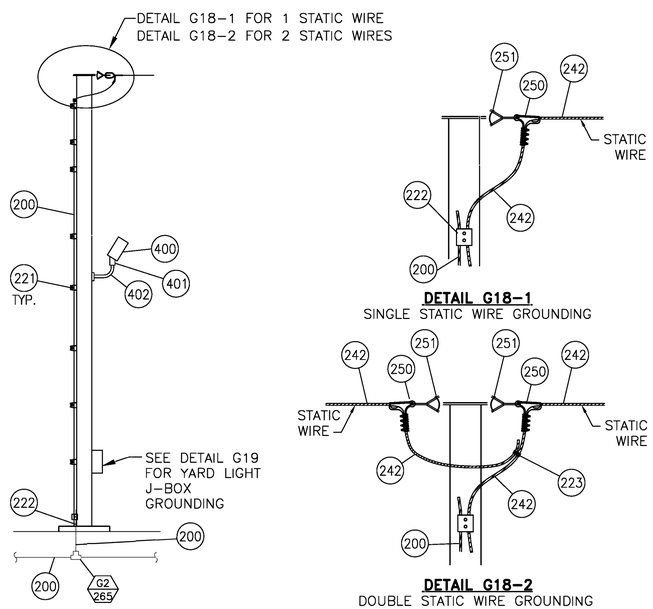

DETAIL G18-1
SINGLE STATIC WIRE GROUNDING

DETAIL G18-2
DOUBLE STATIC WIRE GROUNDING

DETAIL G18
SHIELD MAST GROUNDING

NOTES:
1. CABINETS LOCATED IN THE SUBSTATION YARD SHALL BE GROUNDED TO THE NEAREST 4/0 GROUNDING CONNECTOR ABOVE GRADE. THIS INCLUDES THE FOLLOWING CABINETS: YARD RECEPTACLE BOXES, TRANSFORMER CONTROL CABINET, BREAKER CONTROL CABINETS, PT/CVT SECONDARY J-BOX AND DISCONNECT BOXES, YARD LIGHT J-BOXES, OR ANY OTHER CABINET REQUIRING GROUND CONNECTION.
2. CABINET DOOR AND RGS CONDUIT ENTRIES INTO CABINET SHALL BE GROUNDED PER DETAIL G23.

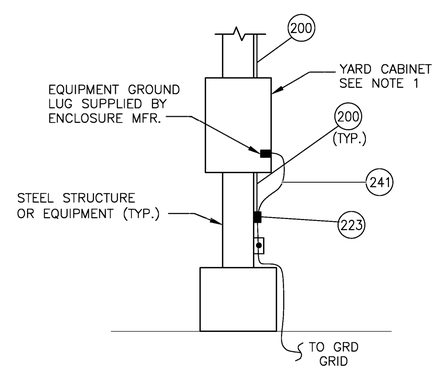

DETAIL G19
TYPICAL CABINET GROUNDING

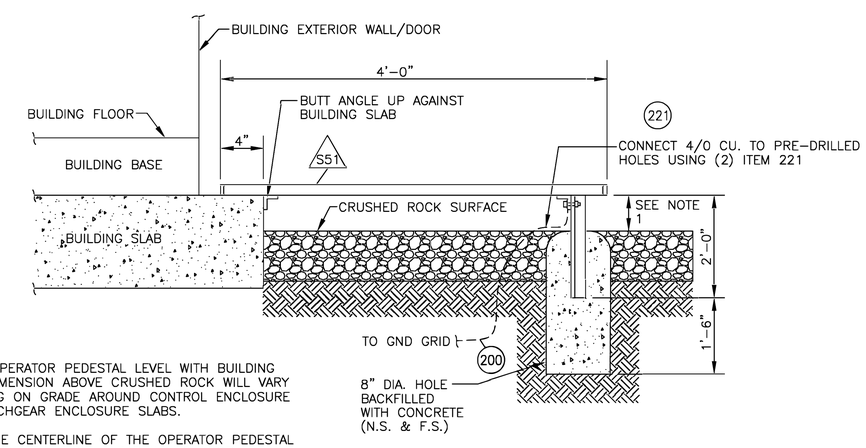

NOTES
1. INSTALL OPERATOR PEDESTAL LEVEL WITH BUILDING SLAB. DIMENSION ABOVE CRUSHED ROCK WILL VARY DEPENDING ON GRADE AROUND CONTROL ENCLOSURE AND SWITCHGEAR ENCLOSURE SLABS.
2. MOUNT THE CENTERLINE OF THE OPERATOR PEDESTAL ON THE CENTERLINE OF THE BUILDING DOOR.

DETAIL G20
DOOR STOOP GROUNDING

P:\041233\00\DWG\RECORD\WRC\CAD\WRC-C-267.DWG

DGR ENGINEERING
ROCK RAPIDS, IOWA
(712) 472-2531

DATE	DRAWN BY	NO.	APPROVED BY	REVISION DESCRIPTION
06-20	KLV	1	PDK	CONFORMING TO CONSTRUCTION RECORDS
01-19	KLV	0	PDK	FOR CONSTRUCTION

BLACK HILLS ENERGY
WEST RAPID CITY SUBSTATION
GROUNDING DETAILS

DRAWN BY KLV DATE 10-18
APPROVED BY PDK DATE 10-18
DWG NO. WRC-C-267 REVISION 1

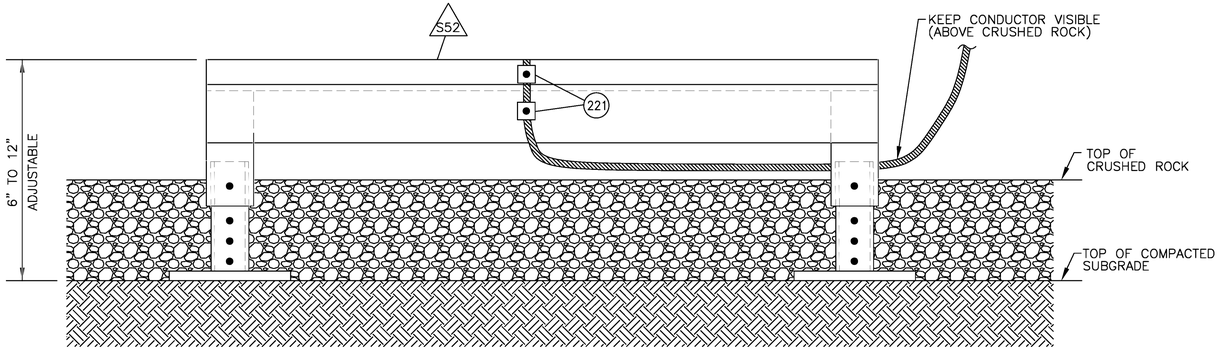

DETAIL G21
SWITCH AND BREAKER PLATFORM MOUNTING

DETAIL G22
NOT USED

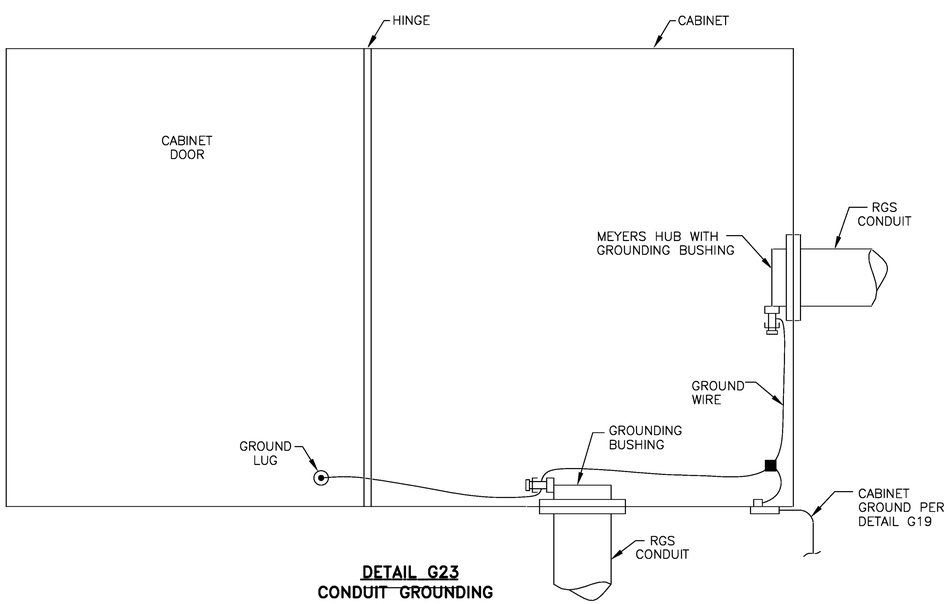

DETAIL G23
CONDUIT GROUNDING

P:\041233\00\DWG\RECORD\WRC\CAD\WRC-C-268.DWG

DGR ENGINEERING
ROCK RAPIDS, IOWA
(712) 472-2531

DATE	DRAWN BY	NO.	APPROVED BY	REVISION DESCRIPTION
06-20	KLV	1	PDK	CONFORMING TO CONSTRUCTION RECORDS
01-19	KLV	0	PDK	FOR CONSTRUCTION

BLACK HILLS ENERGY
WEST RAPID CITY SUBSTATION
GROUNDING DETAILS

DRAWN BY KLV DATE 10-18
APPROVED BY PDK DATE 10-18
DWG NO. WRC-C-268 REVISION 1

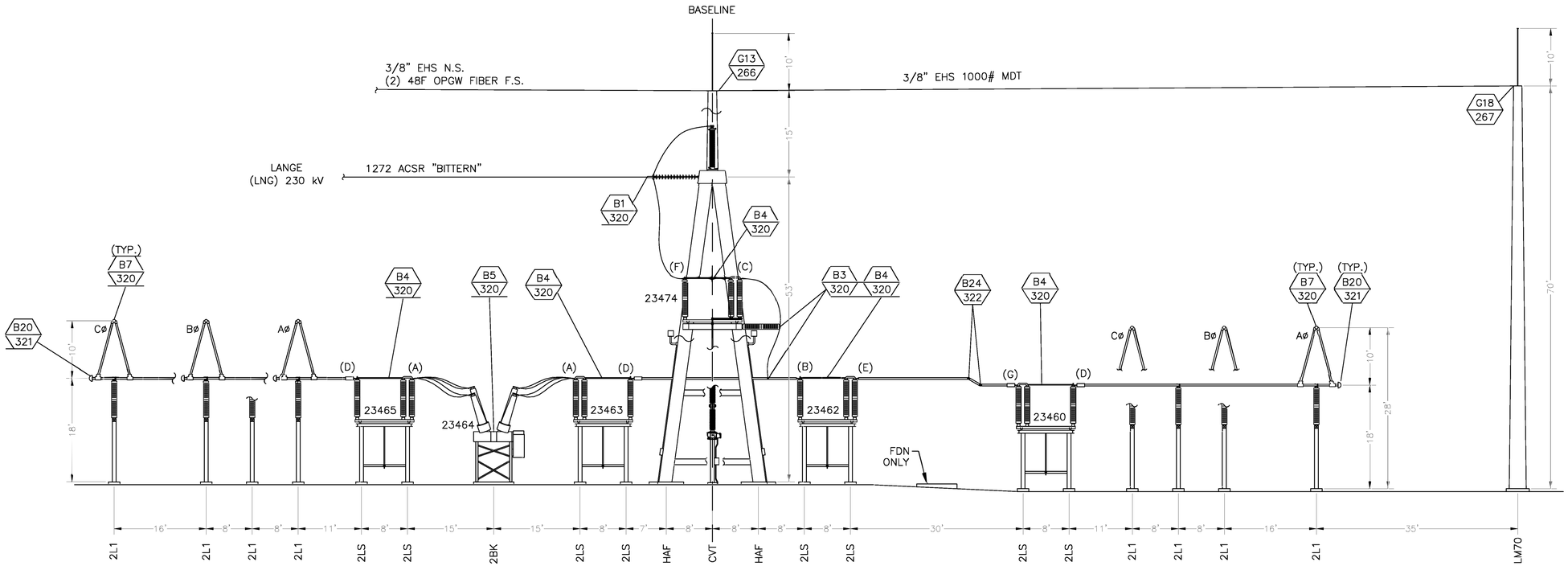

SECTION A–A

NOTES:

1. BUS COUPLING LOCATIONS SHALL BE DETERMINED BY CONTRACTOR AS NEEDED BASED UPON BUS LENGTHS PROCURED.

LEGEND

B27 / 320 — DETAIL # / DWG #

1L1 — STRUCTURE #

(A) — SUB–DETAIL ASSIGNMENT

0' 10' 20'
SCALE IN FEET

P:\04233\00\DWG\RECORD\WRC\CAD\WRC-C-301.DWG

DGR ENGINEERING
ROCK RAPIDS, IOWA
(712) 472-2531

DATE	DRAWN BY	NO.	APPROVED BY	REVISION DESCRIPTION
06-20	KLV	1	PDK	CONFORMING TO CONSTRUCTION RECORDS
01-19	KLV	0	PDK	FOR CONSTRUCTION

BLACK HILLS ENERGY

WEST RAPID CITY SUBSTATION

SECTION A

DRAWN BY KLV DATE 09-18
APPROVED BY PDK DATE 09-18
DWG NO. WRC-C-301
REVISION NO. 1

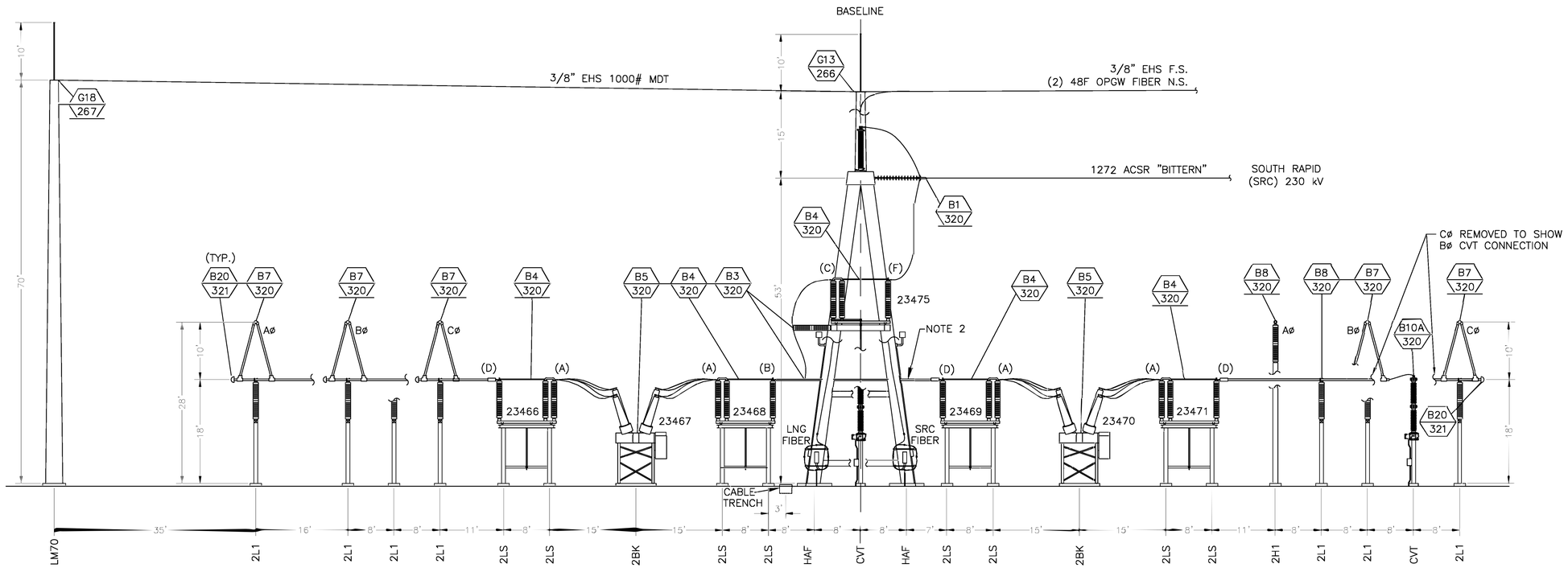

SECTION B–B

NOTES:

1. BUS COUPLING LOCATIONS SHALL BE DETERMINED BY CONTRACTOR AS NEEDED BASED UPON BUS LENGTHS PROCURED.
2. 2LS PIERS WERE INSTALLED 5" LOWER THAN PLAN ACCIDENTALLY. THE BUS WAS OFFSET TO ACCOUNT FOR THE DIFFERENCE.

LEGEND

B27 / 320 — DETAIL # / DWG #
1L1 — STRUCTURE #
(A) — SUB–DETAIL ASSIGNMENT

0' 10' 20'
SCALE IN FEET

DATE	DRAWN BY	NO.	APPROVED BY	REVISION DESCRIPTION
06-20	KLV	1	PJK	CONFORMING TO CONSTRUCTION RECORDS
01-19	KLV	0	PJK	FOR CONSTRUCTION

BLACK HILLS ENERGY

WEST RAPID CITY SUBSTATION

SECTION B

DRAWN BY KLV DATE 09-18
APPROVED BY PJK DATE 09-18

DWG NO. WRC–C–302 SECTION 1 NO.

DGR ENGINEERING
ROCK RAPIDS, IOWA
(712) 472-2531

P:\04233\00\DWG\RECORD\WRC\CAD\WRC-C-302.DWG

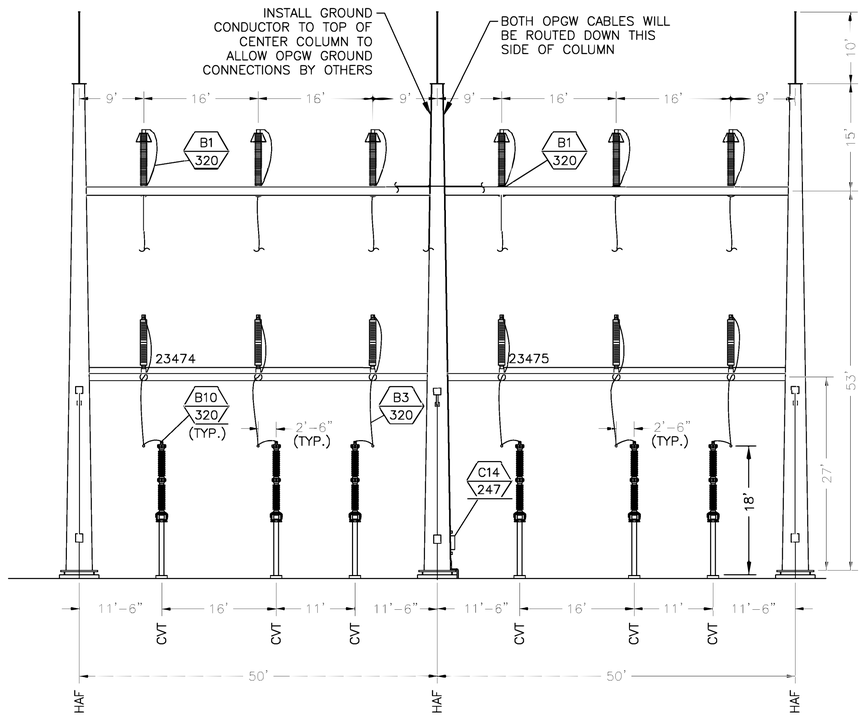

SECTION C–C

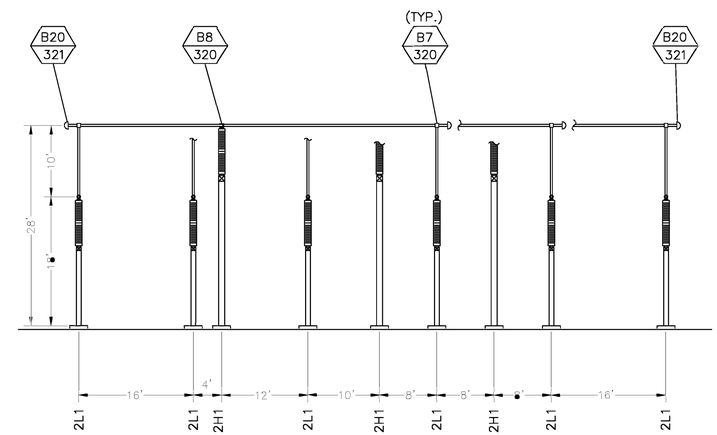

SECTION D–D

NOTES:

1. BUS COUPLING LOCATIONS SHALL BE DETERMINED BY CONTRACTOR AS NEEDED BASED UPON BUS LENGTHS PROCURED.

LEGEND

B27 / 320 — DETAIL # / DWG #

1L1 — STRUCTURE #

(A) — SUB–DETAIL ASSIGNMENT

0' 10' 20'
SCALE IN FEET

P:\04233\00\DWG\RECORD\WRC\CAD\WRC-C-303.DWG

DGR ENGINEERING
ROCK RAPIDS, IOWA
(712) 472-2531

DATE	DRAWN BY	NO.	APPROVED BY	REVISION DESCRIPTION
06-20	KLV	1	PDK	CONFORMING TO CONSTRUCTION RECORDS
01-19	KLV	0	PDK	FOR CONSTRUCTION

BLACK HILLS ENERGY

WEST RAPID CITY SUBSTATION

SECTIONS C AND D

DRAWN BY KLV DATE 09-18
APPROVED BY PDK DATE 09-18

DWG NO. WRC–C–303 REVISION 1

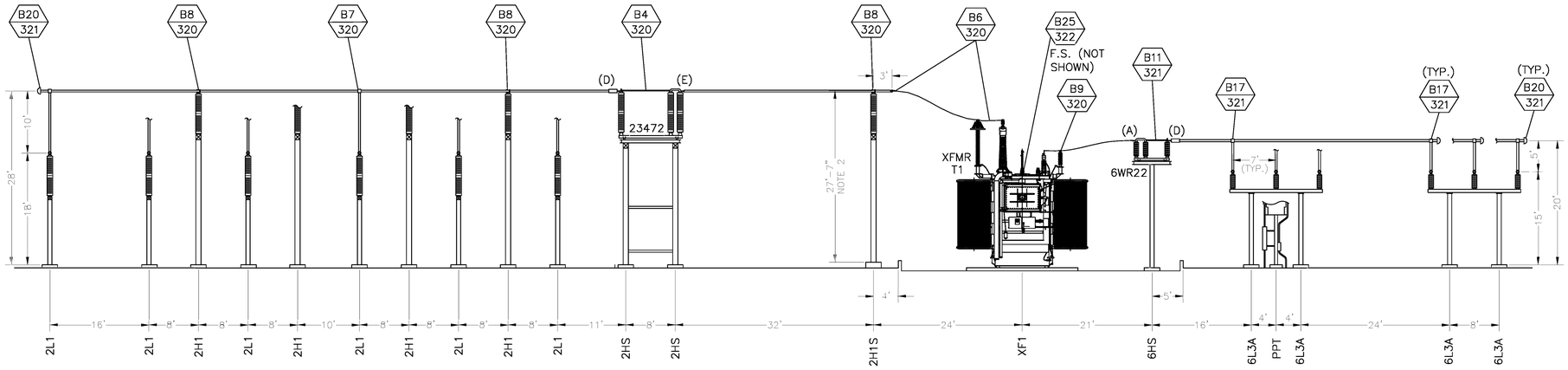

SECTION E-E

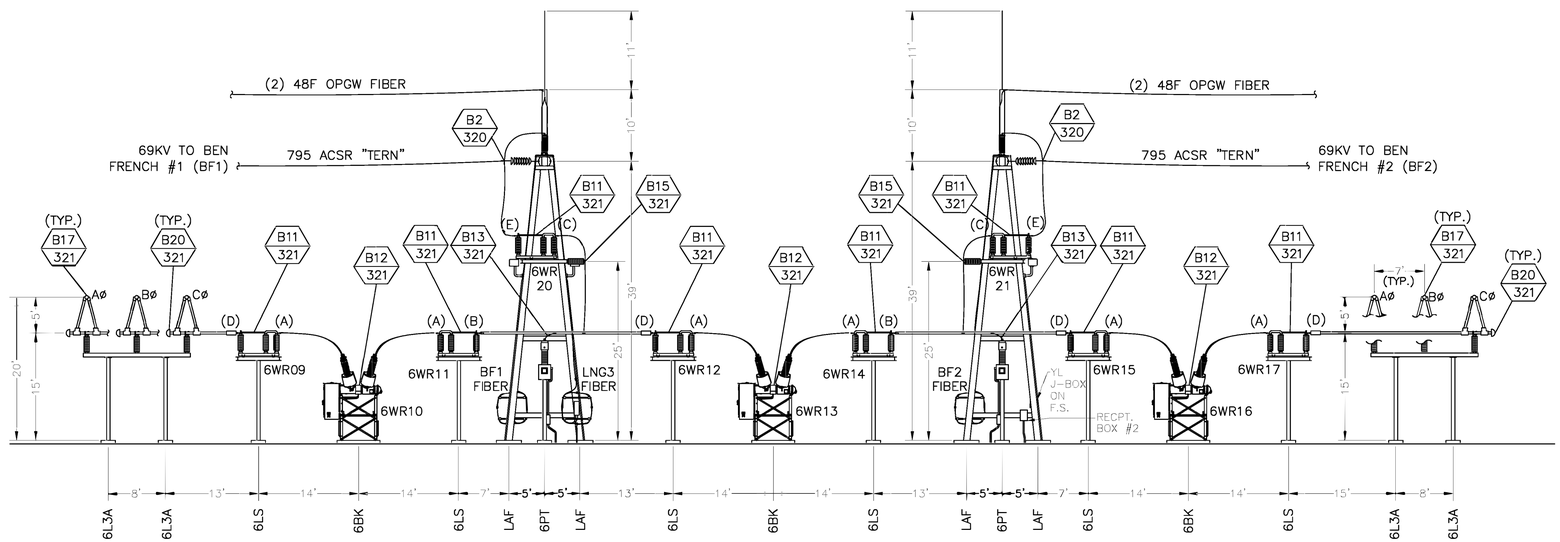

SECTION F-F

NOTES:
1. BUS COUPLING LOCATIONS SHALL BE DETERMINED BY CONTRACTOR AS NEEDED BASED UPON BUS LENGTHS PROCURED.
2. 2H1S STRUCTURE IS 5" SHORTER THAN 2H1 STRUCTURES.

LEGEND

B27 / 320	DETAIL # / DWG #
1L1	STRUCTURE #
(A)	SUB-DETAIL ASSIGNMENT

0' 10' 20'
SCALE IN FEET

P:\04223\00\DWG\RECORD\WRC\CAD\WRC-C-304.DWG

DGR ENGINEERING
ROCK RAPIDS, IOWA
(712) 472-2531

DATE	DRAWN BY	NO.	APPROVED BY	REVISION DESCRIPTION
06-20	KLV	3	PDK	CONFORMING TO CONSTRUCTION RECORDS
10-19	KLV	2	PDK	ADDED NOTES 3 & 4
07-19	KLV	1	PDK	REVISED FOR CONSTRUCTION
01-19	KLV	0	PDK	FOR CONSTRUCTION

BLACK HILLS ENERGY
WEST RAPID CITY SUBSTATION
SECTIONS E AND F

DRAWN BY KLV DATE 09-18
APPROVED BY PDK DATE 09-18
DWG NO. WRC-C-304 REVISION 3

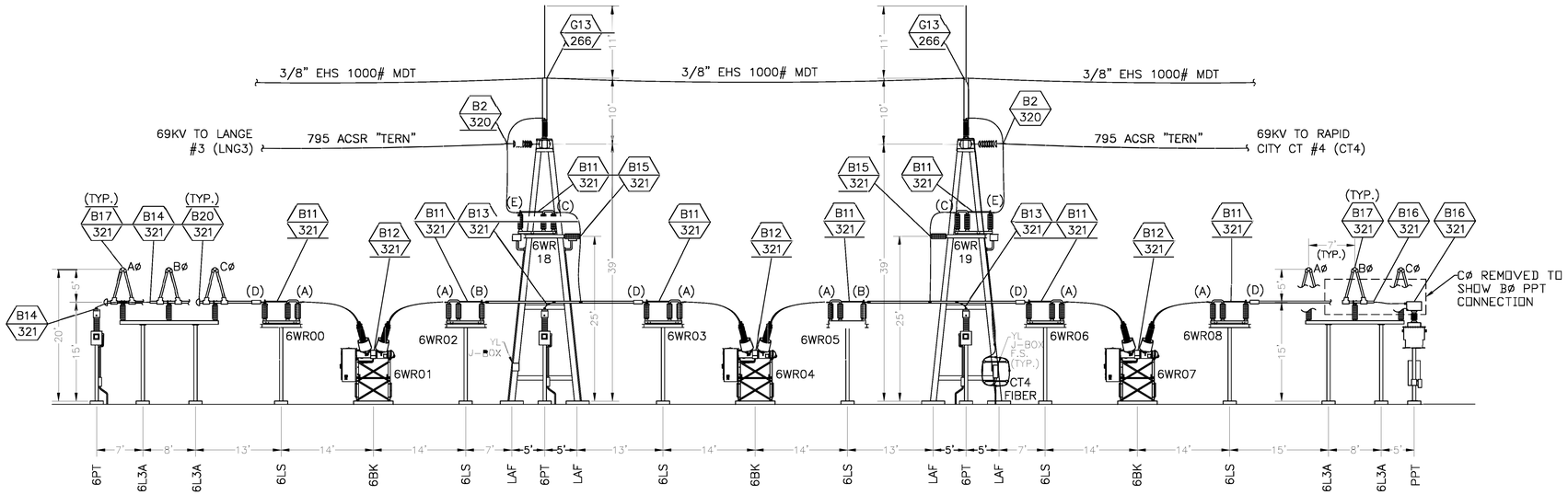

SECTION G–G

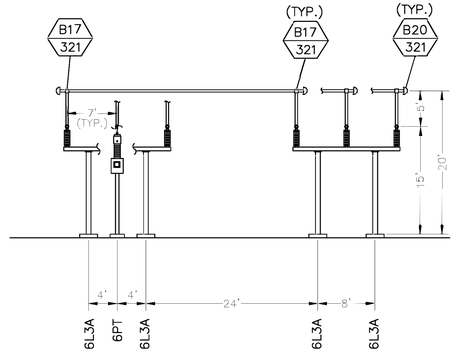

SECTION H–H

NOTES:

1. BUS COUPLING LOCATIONS SHALL BE DETERMINED BY CONTRACTOR AS NEEDED BASED UPON BUS LENGTHS PROCURED.

LEGEND

B27 / 320	DETAIL # / DWG #
1L1	STRUCTURE #
(A)	SUB–DETAIL ASSIGNMENT

0' 10' 20'
SCALE IN FEET

DATE	DRAWN BY	NO.	APPROVED BY	REVISION DESCRIPTION
06-20	KLV	2	PDK	CONFORMING TO CONSTRUCTION RECORDS
10-19	KLV	1	PDK	ADDED NOTES 2 & 3
01-19	KLV	0	PDK	FOR CONSTRUCTION

BLACK HILLS ENERGY

WEST RAPID CITY SUBSTATION

SECTIONS G AND H

DRAWN BY KLV DATE 10-18
APPROVED BY PDK DATE 10-18
DWG NO. WRC–C–305 REVISION NO. 2

DGR ENGINEERING
ROCK RAPIDS, IOWA
(712) 472-2531

P:\04233\00\DWG\RECORD\WRC\CAD\WRC-C-305.DWG

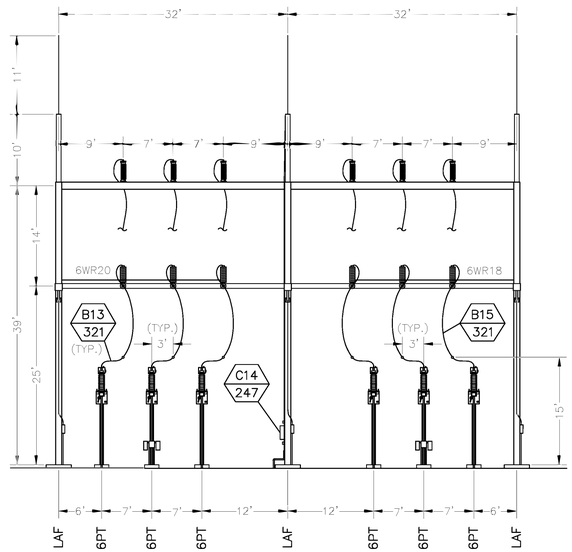

SECTION I–I

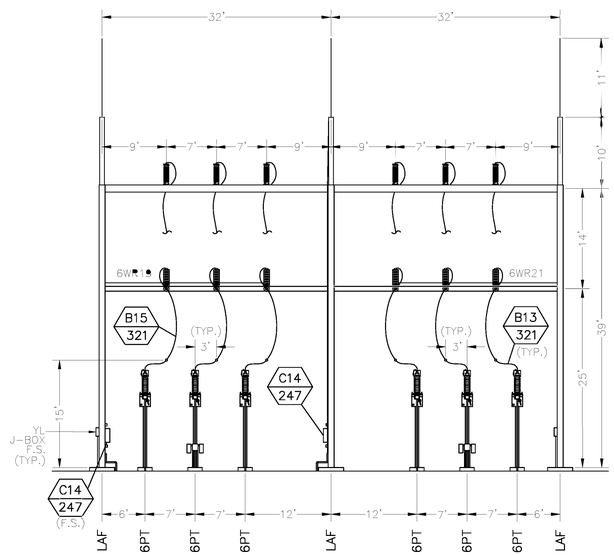

SECTION J–J

NOTES:

1. BUS COUPLING LOCATIONS SHALL BE DETERMINED BY CONTRACTOR AS NEEDED BASED UPON BUS LENGTHS PROCURED.

LEGEND

B27 / 320	DETAIL # / DWG #
1L1	STRUCTURE #
(A)	SUB–DETAIL ASSIGNMENT

0' 10' 20'
SCALE IN FEET

P:\04233\00\DWG\RECORD\WRC\CAD\WRC-C-306.DWG

DGR ENGINEERING
ROCK RAPIDS, IOWA
(712) 472-2531

DATE	DRAWN BY	NO.	APPROVED BY	REVISION DESCRIPTION
06-20	KLV	2	PDK	CONFORMING TO CONSTRUCTION RECORDS
10-19	KLV	1	PDK	ADDED NOTE 2
01-19	KLV	0	PDK	FOR CONSTRUCTION

BLACK HILLS ENERGY

WEST RAPID CITY SUBSTATION

SECTIONS I AND J

DRAWN BY KLV DATE 10-18
APPROVED BY PDK DATE 10-18
DWG NO. WRC–C–306
REVISION NO. 2

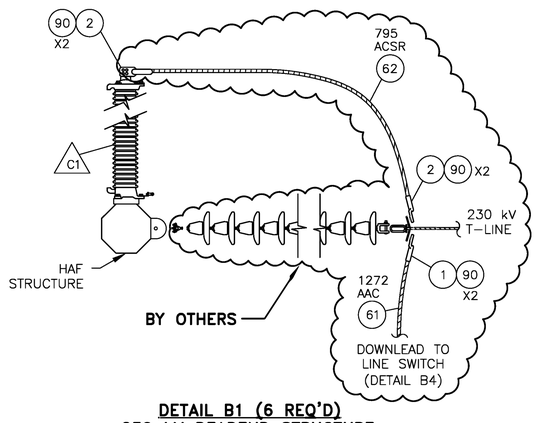

DETAIL B1 (6 REQ'D)
230 kV DEADEND STRUCTURE
T-LINE ATTACHMENT DETAIL

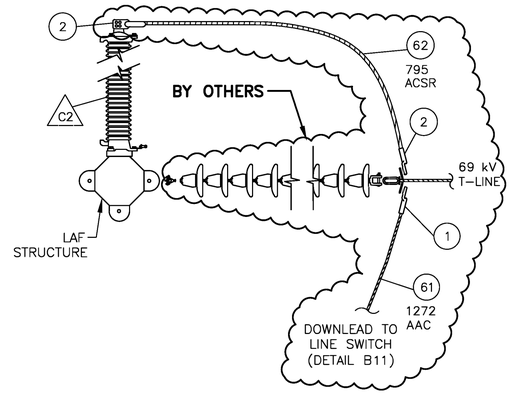

DETAIL B2 (12 REQ'D)
69 kV DEADEND STRUCTURE
T-LINE ATTACHMENT DETAIL

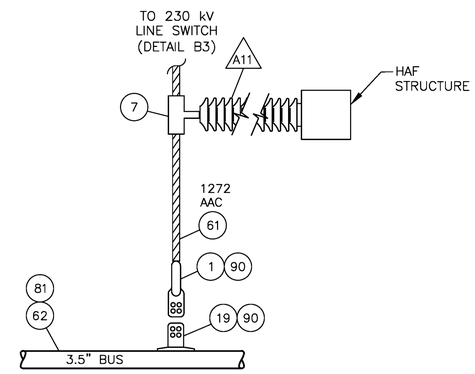

DETAIL B3 (6 REQ'D)
BUS CONNECTION DETAIL
230 kV DOWNLEAD CONNECTIONS

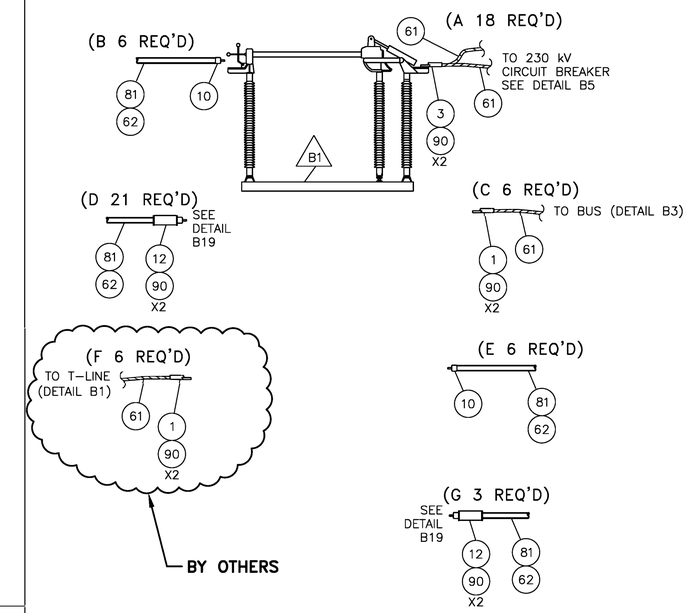

DETAIL B4
230 kV DISCONNECT SWITCH
CONNECTION DETAIL

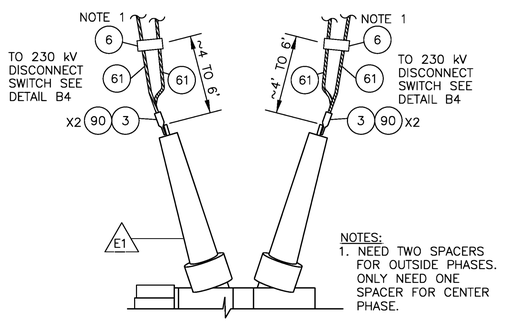

DETAIL B5 (9 REQ'D)
230 kV PCB CONNECTION DETAIL

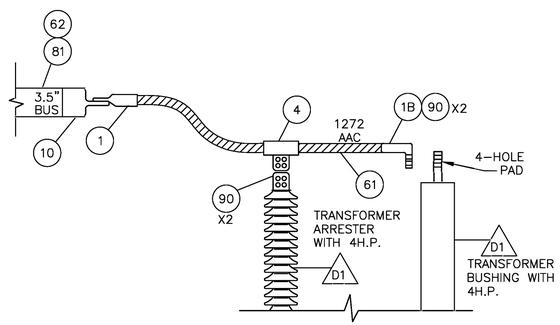

DETAIL B6 (3 REQ'D)
230/69 kV TRANSFORMER HIGHSIDE
CONNECTION DETAIL

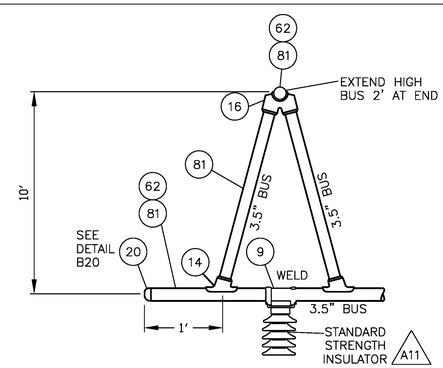

DETAIL B7 (12 REQ'D)
230 kV BUS BI-LEVEL
SUPPORT ASSEMBLY DETAIL

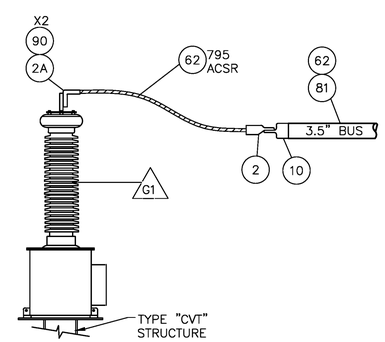

DETAIL B10A (1 REQ'D)
230 kV BUS CVT
CONNECTION DETAIL

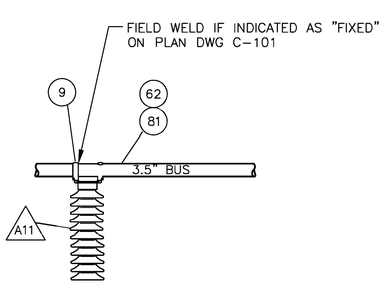

DETAIL B8 (14 REQ'D)
230 kV BUS SUPPORT
ASSEMBLY DETAIL

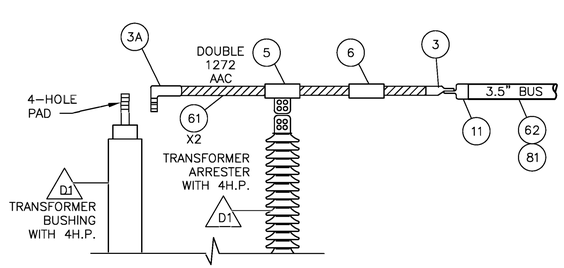

DETAIL B9 (3 REQ'D)
230/69 kV TRANSFORMER LOWSIDE
CONNECTION DETAIL

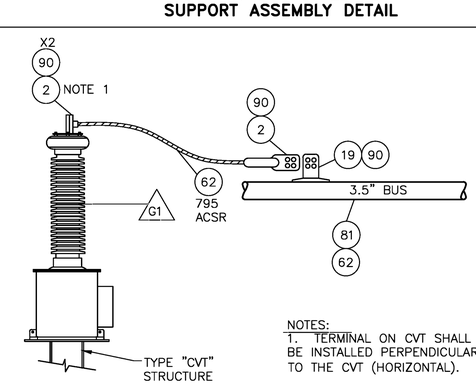

NOTES:
1. TERMINAL ON CVT SHALL BE INSTALLED PERPENDICULAR TO THE CVT (HORIZONTAL).

DETAIL B10 (6 REQ'D)
230 kV LINE CVT
CONNECTION DETAIL

P:\0402310\DWG\RECORD\WRC\CAD\WRC-C-320.DWG

DGR ENGINEERING
ROCK RAPIDS, IOWA
(712) 472-2531

DATE	DRAWN BY	NO.	APPROVED BY	REVISION DESCRIPTION
06-20	KLV	1	PDK	CONFORMING TO CONSTRUCTION RECORDS
01-19	KLV	0	PDK	FOR CONSTRUCTION

BLACK HILLS ENERGY

WEST RAPID CITY SUBSTATION

BUS CONNECTION DETAILS

DRAWN BY KLV DATE 10-18
APPROVED BY PDK DATE 10-18
DWG NO. WRC-C-320 REVISION 1

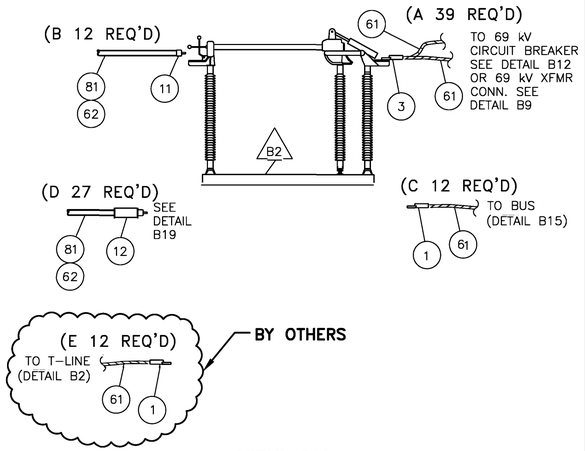

DETAIL B11
69 kV DISCONNECT SWITCH CONNECTION DETAIL

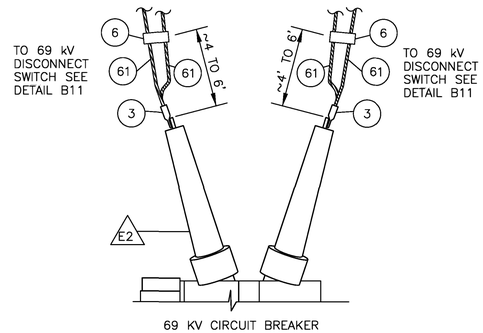

DETAIL B12 (18 REQ'D)
69 kV PCB CONNECTION DETAIL

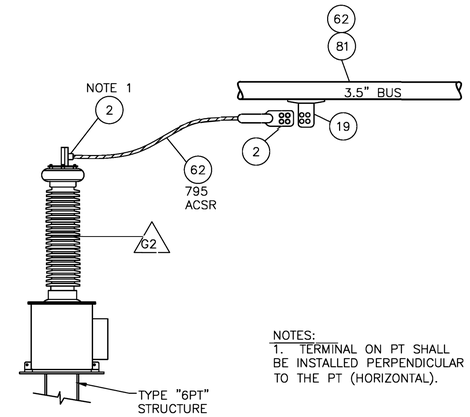

DETAIL B13 (12 REQ'D)
69 kV LINE PT'S CONNECTION DETAIL

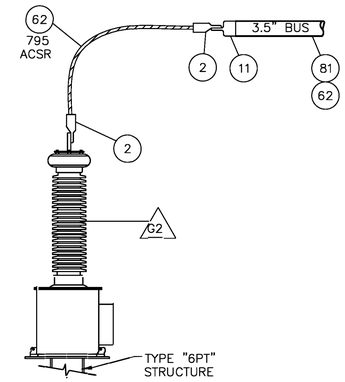

DETAIL B14 (1 REQ'D)
69 kV BUS PT CONNECTION DETAIL

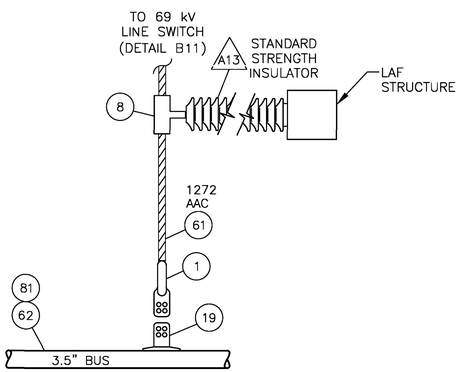

DETAIL B15 (12 REQ'D)
BUS CONNECTION DETAIL
69 kV DOWNLEAD CONNECTIONS

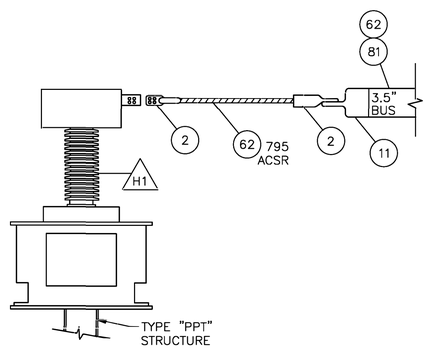

DETAIL B16 (1 REQ'D)
69 kV POWER PT CONNECTION DETAIL

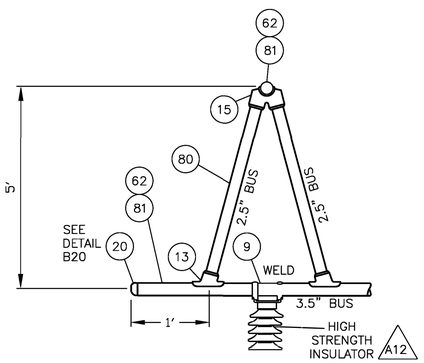

DETAIL B17 (12 REQ'D)
69 kV BUS BI-LEVEL SUPPORT ASSEMBLY DETAIL

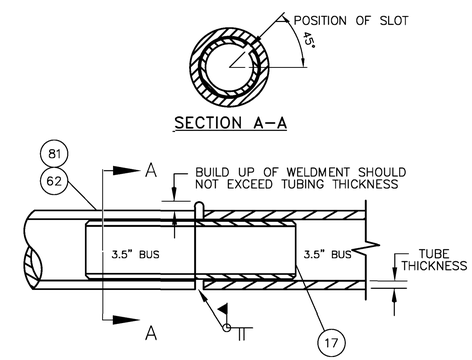

DETAIL B18 (AS REQ'D)
BUS COUPLER JOINT

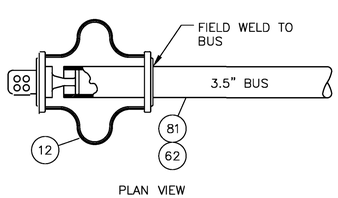

DETAIL B19
EXPANSION BUS TERMINAL DETAIL

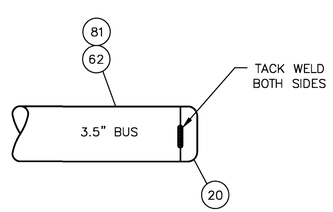

DETAIL B20 (39 REQ'D)
END CAP DETAIL

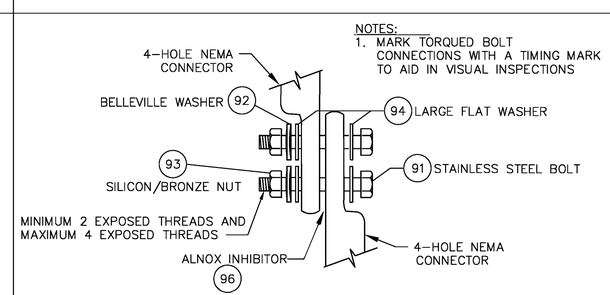

DETAIL B21 (AS REQ'D)
69 kV 4-HOLE NEMA PAD CONNECTIONS

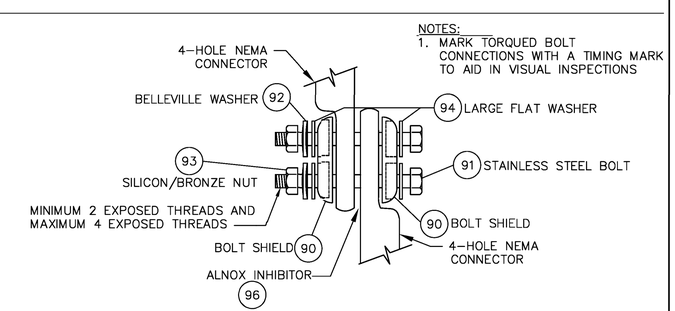

DETAIL B22 (AS REQ'D)
230 kV 4-HOLE NEMA PAD CONNECTIONS

P:\0423300\DWG\RECORD\WRCCAD\WRC-C-321.DWG

DGR ENGINEERING
ROCK RAPIDS, IOWA
(712) 472-2531

DATE	DRAWN BY	NO.	APPROVED BY	REVISION DESCRIPTION
06-20	KLV	1	PDK	CONFORMING TO CONSTRUCTION RECORDS
01-19	KLV	0	PDK	FOR CONSTRUCTION

BLACK HILLS ENERGY
WEST RAPID CITY SUBSTATION
BUS CONNECTION DETAILS

DRAWN BY KLV DATE 10-18
APPROVED BY PDK DATE 10-18
DWG NO. WRC-C-321
REVISION 1

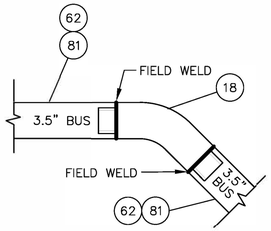

DETAIL B24 (6 REQ'D)
BUS COUPLER 45°
CONNECTION DETAIL

NOTES:

1. INSULATION COVER OVER 1272 AAC SHALL BE TAPED PER MANUFACTURER'S RECOMMENDATION WITH FUSING TAPE (ITEM 42).
2. FUSING TAPE SHALL BE USED FOR ALL EXPOSED CONNECTORS OR CONDUCTOR.
3. BUSHING AND ARRESTER CONNECTORS SHALL BE COVERED BY THE BUSHING AND ARRESTER COVERS. IF NOT, FUSING TAPE SHALL BE USED.
4. ARRESTER AND BUSHING COVERS SHALL ONLY COVER THE FIRST OR SECOND SKIRT FROM THE TOP.

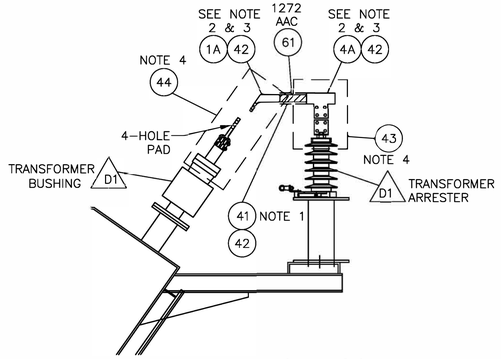

DETAIL B25 (3 REQ'D)
TRANSFORMER TERITARY
CONNECTION DETAIL

P:\04233\00\DWG\RECORD\WRC\CAD\WRC-C-322.DWG

DGR ENGINEERING
ROCK RAPIDS, IOWA
(712) 472-2531

DATE	DRAWN BY	NO.	APPROVED BY	REVISION DESCRIPTION
06-20	KLV	1	PDK	CONFORMING TO CONSTRUCTION RECORDS
01-19	KLV	0	PDK	FOR CONSTRUCTION

BLACK HILLS ENERGY

WEST RAPID CITY SUBSTATION

BUS CONNECTION DETAILS

DRAWN BY KLV DATE 10-18
APPROVED BY PDK DATE 10-18
DWG NO. WRC-C-322
SECTION 1 NO

Item No.	OFM	Catalog Number	Description	Manufacturer	"Total Required"
1	X	WCF-136-D	CONNECTOR, TERMINAL, WELDED, 1272 AAC TO 4" NEMA 4HP	ANDERSON	75
1A	X	WCF-136-D-Y45	CONNECTOR, TERMINAL, WELDED, 1272 AAC TO 4" NEMA 4HP, 45°	ANDERSON	3
1B	X	WCF-136-D-Y90	CONNECTOR, TERMINAL, WELDED, 1272 AAC TO 4" NEMA 4HP, 90°	ANDERSON	3
2	X	WCF-106-D	CONNECTOR, TERMINAL, WELDED, 795 ACSR TO 4" NEMA 4HP	ANDERSON	77
2A	X	WCF-106-D-Y90	CONNECTOR, TERMINAL, WELDED, 795 ACSR TO 4" NEMA 4HP, 90°	ANDERSON	1
3	X	W2CF-136-D	CONNECTOR, TERMINAL, WELDED, (2) 1272 AAC TO 4" NEMA 4HP	ANDERSON	114
3A	X	W2CF-136-D-Y90	CONNECTOR, TERMINAL, WELDED, (2) 1272 AAC TO 4" NEMA 4HP, 90°	ANDERSON	3
4	X	ORT-2114-D	CONNECTOR, TEE, COMPRESSION, 1272 AAC MAIN TO 4" NEMA 4HP	ANDERSON	3
4A	X	ATCF-15401	CONNECTOR, TEE, BOLTED, 1272 AAC MAIN TO 4" NEMA 4HP	ANDERSON	3
5	X	110-121-CSTD-4-90	CONNECTOR, SPACER, BOLTED, (2) 1272 AAC, 4" SPACING TO 4" NEMA 4HP, 90°	TRAVIS (PDU)	3
6	X	APCS-15-4	CONNECTOR, SPACER, BOLTED, (2) 1272 AAC, 4" SPACING	ANDERSON	69
7	X	HVCS-12995	BUS SUPPORT, BOLTED, EHV, 1272 AAC TO 5" BOLT CIRCLE	ANDERSON	6
8	X	ACS-163	BUS SUPPORT, BOLTED, 1272 AAC TO 3" BOLT CIRCLE	ANDERSON	12
9	X	WTH-34-5	BUS SUPPORT, WELDED/SLIP, 3-1/2" IPS TO 5" BOLT CIRCLE	ANDERSON	38
10	X	WSTFE-34-D-CF-EHV	CONNECTOR, TERMINAL, WELDED, EHV, 3-1/2" IPS TO 4" NEMA 4HP, CENTER FORMED, WITH BOLT SHIELD	ANDERSON	16
11	X	WSTF-34-D-CF	CONNECTOR, TERMINAL, WELDED, 3-1/2" IPS TO 4" NEMA 4HP, CENTER FORMED	ANDERSON	17
12	X	WFTFV-34D	CONNECTOR, TERMINAL, WELDED, EXPANSION, 3-1/2" IPS TO 4" NEMA 4HP, 90°	ANDERSON	51
13	X	WTT-15-3424	FITTING, WELDED TEE, 15 DEGREE, 3-1/2" IPS MAIN TO 2-1/2" IPS TAP	ANDERSON	24
14	X	WTT-15-3434	FITTING, WELDED TEE, 15 DEGREE, 3-1/2" IPS MAIN TO 3-1/2" IPS TAP	ANDERSON	24
15	X	WTT2-15-3424	FITTING, WELDED VEE, 15 DEGREE, 3-1/2" IPS MAIN TO 2-1 /2" IPS VEE	ANDERSON	12
16	X	WTT2-15-3434	FITTING, WELDED VEE, 15 DEGREE, 3-1/2" IPS MAIN TO 3-1 /2" IPS VEE	ANDERSON	12
17	X	WCI-3434	FITTING, COUPLER, WELDED, INTERNAL, 3-1/2" IPS TO 3-1/2" IPS	ANDERSON	13
18	X	WLI45-3434	FITTING, COUPLER, WELDED, 45°, INTERNAL, 3-1/2" IPS TO 3-1/2" IPS	ANDERSON	6
19	X	WTTFR-30-60-D	FITTING, TEE, WELDED, 3"-6" IPS RUN TO 4" NEMA 4HP, INLINE PAD	ANDERSON	36
20	X	WEB34	FITTING, CORONA BELL, WELDED, INTERNAL FIT, 3-1/2" IPS	ANDERSON	39
41	X	E/INS-150-G	WILDLIFE PROTECTOR, SPLIT TUBING, GRAY, FOR 1272 AAC, 20 KV PHASE-GND	MIDSUN GROUP	10'
42	X	E/FTP-250G	WILDLIFE PROTECTOR, FUSING TAPE, GRAY, 2.5" WIDE, FOR EXPOSED CONNECTORS & W/ITEM 41 & 43	MIDSUN GROUP	AS REQ'D
43	X	E/BSC-350	WILDLIFE PROTECTOR, COVER FOR XFMR ARRESTERS	MIDSUN GROUP	3
44	X	E/BC-DBL-LEAD	WILDLIFE PROTECTOR, BUSHING COVER FOR TRANSFORMER	MIDSUN GROUP	3
61	X	NARCISSUS	CONDUCTOR, 1272 MCM AAC, 61 STRANDING	ALCOA	2500'
62	X	TERN	CONDUCTOR, 795 MCM ACSR 45/7 STRANDING, FOR HIGH VOLTAGE CONNECTIONS	ALCOA	500'
62	X	TERN	CONDUCTOR, 795 MCM ACSR 45/7 STRANDING, FOR BUS DAMPENING	ALCOA	2000'
80		2.5" - 6063-T6	CONDUCTOR, BUS, 2-1/2" IPS, SCHEDULE 40 ALUMINUM, 40' LENGTHS	ALCOA	200'
81		3.5" - 6063-T6	CONDUCTOR, BUS, 3-1/2" IPS, SCHEDULE 40 ALUMINUM, 40' LENGTHS	ALCOA	2520'
90	X	EVHS-D	HARDWARE SHIELDS, EHV, 4" NEMA 4HP (BOLT SHIELDS)	ANDERSON	230
91		HBS-XXX	STAINLESS STEEL BOLTS, 1/2" FOR ALUMINUM BUS CONNECTIONS, CONTRACTOR TO DETERMINE LENGTH	ANDERSON	AS REQ'D
92		BW500	STAINLESS STEEL BELLEVILLE WASHER, 1/2", 1.06" O.D.	ANDERSON	AS REQ'D
93		HNB500	SILICON BRONZE NUT, HIGH STRENGTH, 1/2"	ANDERSON	AS REQ'D
94		HFS5001	STAINLESS STEEL WASHER, 1/2", 1.13" O.D.	ANDERSON	AS REQ'D
96		PENETROX A	ELECTRICAL FILLER COMPOUND, NON-PETROLEUM BASED	BURNDY	AS REQ'D
200		4/0 COPPER	CONDUCTOR, 4/0 STRANDED SOFT DRAWN COPPER		14,000'
201		633400	GROUND ROD, 3/4" DIAMETER, 10' LONG, COPPER CLAD	ERICO	106
202		CR-34	GROUND ROD COUPLING, FOR CONNECTING MULTIPLE GROUND RODS OR DRIVE STUDS	ERICO	70
203		DS34	GROUND ROD DRIVING STUD	ERICO	20
205		GYR182Q	MOLD, GROUNDING CONNECTOR, EXOTHERMIC, 4/0 CABLE-3/4" GROUND ROD (USE 150 WELD)	ERICO	4
206		XBQ2Q2Q	MOLD, GROUNDING CONNECTOR, EXOTHERMIC, 4/0 CABLE - 4/0 CABLE CROSS (USE 250 WELD)	ERICO	25
207		TAC2Q2Q	MOLD, GROUNDING CONNECTOR, EXOTHERMIC, 4/0 CABLE - 4/0 CABLE TEE (USE 150 WELD)	ERICO	40
208		SSC2Q	MOLD, GROUNDING CONNECTOR, EXOTHERMIC, 4/0 CABLE - 4/0 CABLE SPLICE (USE 90 WELD)	ERICO	3
210		90	WELD METAL, 90 CARTRIDGE SIZE, FOR USE WITH ITEM 208	ERICO	40
211		150	WELD METAL, 150 CARTRIDGE SIZE, FOR USE WITH ITEMS 205 & 207	ERICO	400
212		250	WELD METAL, 250 CARTRIDGE SIZE, FOR USE WITH ITEM 206	ERICO	350
221		GC-141A-02	CONNECTOR, BRONZE, BOLTED, 1-4/0 COPPER TO FLAT SURFACE	ANDERSON	650
222		GC-143A-02	CONNECTOR, BRONZE, BOLTED, 2-4/0 COPPER TO FLAT SURFACE	ANDERSON	200
223		K3	CONNECTOR, BRONZE, BOLTED, 2 PARALLEL 4/0 COPPER	ANDERSON	150
224		K1	CONNECTOR, BRONZE, BOLTED, 2 PARALLEL #4 COPPER	ANDERSON	10
225		SWL-025-B	CONNECTOR, BRONZE, BOLTED, #4-4/0 COPPER TO NEMA 2HP	ANDERSON	80
226		SBS2	CONNECTOR, BOLTED, 1-#4 SOLID COPPER TO TYPE A4 BARBED WIRE/FENCE FABRIC	ANDERSON	200
227		GC-111-5B	CONNECTOR, BOLTED, 1-#4 SOLID COPPER TO 1-5/8" FENCE TOP RAIL/GATE FRAME	ANDERSON	60
228		GC-110-82C	CONNECTOR, BOLTED, 2-4/0 STRANDED COPPER TO 2-1/2" FENCE LINE POST	ANDERSON	20
229		GC-110-102C	CONNECTOR, BOLTED, 2-4/0 STRANDED COPPER TO 3" FENCE CORNER POST	ANDERSON	4
230		GC-110-142C	CONNECTOR, BOLTED, 2-4/0 STRANDED COPPER TO 4" GATE POST	ANDERSON	4
231		GC-109-06	CONNECTOR, BOLTED, FLEXIBLE COPPER BRAID TO 2" GATE FRAME	ANDERSON	8
233		GB-100-3B	FLEXIBLE COPPER BRAID 24" LONG WITH TIN PLATED FERRULES EACH END	ANDERSON	8
240		#4 SD SOLID CU	CONDUCTOR, #4 SOLID SOFTDRAWN COPPER		500'
241		#6 SD SOLID CU	CONDUCTOR, #6 SOLID SOFTDRAWN COPPER		150'
242		3/8" EHS	CONDUCTOR, 7 WIRE, 3/8" EXTRA HIGH STRENGTH STEEL		500'
250		SWDE46N	DEADEND, BOLTED, STATIC WIRE, 3/8" EHS STEEL, QUADRANT STRAIN CLAMP	ANDERSON	8
251		YCS-04-90	Y-CLEVIS EYE, FOR STATIC WIRE DEADEND, 90°	ANDERSON	8

Item No.	OFM	Catalog Number	Description	Manufacturer	"Total Required"
271	X	804-LL8-400MPE	FIBER OPTIC CABLE, MULTIMODE DUPLEX	QUIKTRON	400'
272	X	12048R101	FIBER OPTIC CABLE, MULTI-FIBER	SUPERIOR ESSEX	1460'
273	X	DF4X1C-XXXX	CONDUIT, INNERDUCT, 1" ORANGE CORROGATED W/TAPE	CARLON	1500'
274		802-118-400MPE	FIBER OPTIC CABLE, MULTIMODE 62.5 UM, 2 FIBERS, ST CONNECTORS, 400' LONG	QUIKTRON	400'
280	X		CONTROL CABLE, (3) CONDUCTOR #12, 3/C-#12 SH, E2 COLOR CODE		350'
281	X		CONTROL CABLE, (2) CONDUCTOR #10, 2/C-#10 SH, E2 COLOR CODE		3600'
282	X		CONTROL CABLE, SHIELDED, (4) CONDUCTOR #10, 4/C-#10 SH, E2 COLOR CODE		500'
283	X		CONTROL CABLE, SHIELDED, (9) CONDUCTOR #10, 9/C-#10 SH, E2 COLOR CODE		5500'
284	X		CONTROL CABLE, SHIELDED, (12) CONDUCTOR #10, 12/C-#10 SH, E2 COLOR CODE		5600'
285	X		CONTROL CABLE, (2) CONDUCTOR #6, 2/C-#6 SH, E2 COLOR CODE		1500'
286	X		CONTROL CABLE, (3) CONDUCTOR #6, 3/C-#6 SH, E1 COLOR CODE		2100'
287	X		POWER CABLE, (1) CONDUCTOR 500 MCM, 1/C-500, BLACK INSULATION		1250'
291			TERMINAL CONNECTORS, CONTROL CABLE, VARIOUS SIZES		1850
292			TERMINAL CONNECTORS, CONTROL CABLE, SHIELD		130
293			TERMINAL CONNECTORS, POWER CABLE, 500 MCM		18
294			CABLE MARKERS		1 LOT
300			CONDUIT, BELOW-GRADE, VARIOUS SIZES, SCHEDULE 40 PVC AND ASSOCIATED FITTINGS AND PULL WIRE		1 LOT
301			CONDUIT, STATION POWER RISERS, 90° ELBOW, 3-1/2" RIGID GALVANIZED STEEL, 40" MIN RADIUS		4
310			CONDUIT, ABOVE-GRADE, VARIOUS SIZES, RIGID GALVANIZED STEEL AND ASSOCIATED FITTINGS		1 LOT
311			CONDUIT, ABOVE-GRADE, VARIOUS SIZES, LIQUID-TIGHT FLEXIBLE AND ASSOCIATED FITTINGS		1 LOT
330			ANTI-CORROSION TAPE, FOR RIGID GALVANIZED STEEL INSTALLED BELOW GRADE		1 LOT
380	X		CABLE TRENCH ASSEMBLY	TRENWA	1 LOT
381	X		CABLE TRENCH GROUND CLAMPS	TRENWA	90
382			DRAIN TILE, 4" PERFORATED, HDPE, WITH COUPLINGS & ACCESSORIES AS NEEDED		630'
383			OUTLET, DRAIN TILE, 4", PREFABRICATED CMP, FLARED END, WITH RODENT GUARD		2
384			FENCE POST, MARKER FOR DRAIN TILE OUTLET		2
390			CONDUIT MARKER		9
400	X	FXL-56L-190-5K-W-U-Y-GR	FLOOD LIGHT, LED, 120-277 VAC, 187 WATT (400W MH EQUIVALENT)	HUBBELL	16
401	X	4024CM53	FLOOD LIGHT SLIP-FITTER, STEEL FOR 2" PIPE, 2 3/8" O.D. YOKE MOUNT	HUBBELL	16
402	X	6387	FLOOD LIGHT WALL BRACKET, 2" SLIP FITTER, GRAY	HOLOPHANE	16
500		FENCE	CHAIN-LINK FENCE SYSTEM		1184'
501		GATES	GATE, CHAIN-LINK DOUBLE GATE, 24' TOTAL WIDTH, WITH ONE PERSONNEL GATE		2

NOTES:

1. SEE PROJECT SPECIFICATIONS AND DETAIL DRAWINGS FOR FURTHER MATERIAL DETAILS AS NEEDED.
2. SUPPLIER SHALL BE RESPONSIBLE FOR PROVIDING OFM QUANTITIES AS REQUIRED TO COMPLETE THE PROJECT.
3. QUANTITIES OF CONTRACTOR-FURNISHED MATERIALS SHALL BE VERIFIED BY CONTRACTOR.
4. OWNER SHALL BE NOTIFIED OF ANY QUANTITIES THAT MAY BE SHOWN INCORRECTLY ON THIS DRAWING.

DATE	DRAWN BY	NO.	APPROVED BY	REVISION DESCRIPTION
06-20	KLV	3	PDK	CONFORMING TO CONSTRUCTION RECORDS
10-19	KLV	2	PDK	REVISED ITEM 287 QUANTITY
07-19	KLV	1	PDK	REVISED FOR CONSTRUCTION
01-19	KLV	0	PDK	FOR CONSTRUCTION

BLACK HILLS ENERGY

WEST RAPID CITY SUBSTATION

MATERIAL LIST

DRAWN BY KLV DATE 01-19

APPROVED BY PDK DATE 01-19

DWG NO. WRC-C-380 REVISION 3

DGR ENGINEERING
ROCK RAPIDS, IOWA
(712) 472-2531

P:\04233\00\DWG\RECORD\WRC\CAD\WRC-C-380.DWG

"Item No."	OFM	Catalog Number	Description	Manufacturer	"Total Required"
A11	X	TR-304	BUS SUPPORT INSULATOR, 230 KV, 5" BOLT CIRCLE, STANDARD STRENGTH, 900 KV BIL	LAPP	32
A12	X	TR-278	BUS SUPPORT INSULATOR, 69 KV, 5" BOLT CIRCLE, HIGH STRENGTH, 350 KV BIL	LAPP	12
A13	X	TR-216	BUS SUPPORT INSULATOR, 69 KV, 3" BOLT CIRCLE, STANDARD STRENGTH, 350 KV BIL	LAPP	12
B1	X	VBPA	GROUP OPERATED AIR BREAK SWITCH, 230 KV, 2000 AMP, WITH INSULATORS	PASCOR	11
B2	X	VBPA	GROUP OPERATED AIR BREAK SWITCH, 69 KV, 2000 AMP, WITH INSULATORS	PASCOR	17
C1	X	EVP015200-3001	LIGHTNING ARRESTER, STATION CLASS, POLYMER, 230 KV, 152 KV MCOV, 192 KV DUTY CYCLE	HUBBELL	6
C2	X	EVP004800-3001	LIGHTNING ARRESTER, STATION CLASS, POLYMER, 69 KV, 48 KV MCOV, 60 KV DUTY CYCLE	HUBBELL	12
D1	X	N/A	TRANSFORMER, 230/69/13.2 KV, 90/120/150 MVA, WITH HS AND LS ARRESTERS	DELTA STAR	1
E1	X	200-SFMT-40GHE	CIRCUIT BREAKER, 230 KV, SF6, 1050 KV BIL, 2000 AMP, 40 KA INTERRUPT	MEPPI	3
E2	X	70-SFMT-40E-B	CIRCUIT BREAKER, 69 KV, SF6, 350 KV BIL, 2000 AMP, 40 KA INTERRUPT	MEPPI	6
G1	X	OTCF-245.SI	CAPACITOR VOLTAGE TRANSFORMER, 230 KV, 1050 KV BIL	GE GRID SOL.	7
G2	X	UT5-350-69	POTENTIAL TRANSFORMER, 69 KV, 350 KV BIL	TRENCH	13
H1	X	PST-350 (PPT)	POWER POT. TRANSFORMER, 100 KVA, 69 KV, 350 KV BIL, 40250 - 125/250 VOLT, 1-PHASE, W/ METERING WDG.	ITEC	1
M1	X	DH321FDK	SAFETY SWITCH, 3-POLE, 30A, 240V, NEMA 12 ENCLOSURE, WITH (3) 10A FUSES	EATON	17
M1A	X	NLN-010	10A FUSE	LITTELFUSE	90
M2	X	DH225NRK	SAFETY SWITCH, 2-POLE WITH SOLID NEUTRAL, 400A, 240V, NEMA 3R ENCLOSURE	EATON	1
M2A	X	FLNR400ID	FUSES, 240VAC, 400A. CLASS RKS, FOR STATION POWER DISCONNECTS (INCLUDES TWO SPARE FUSES PER SSD)	LITTELFUSE	4
M3	X	A1614CHFL	ENCLOSURE, STEEL, NEMA 4 AND 12, 16" X 14" X 6", WITH GND BAR & TERM BLOCK AS REQ'D	HOFFMAN	9
M3A	X	GBK14	GROUND BAR, FOR USE WITH ITEM M3	EATON	9
M3B	X	AGLK2 OR EQUAL	GROUND LUG, FOR CONNECTING ITEM M3 & M3A TO GROUND GRID	HOFFMAN	9
M3D	X	A16P14	INTERIOR PANEL, FOR ITEM M3	HOFFMAN	9
M4	X	U051C	RECEPTACLE ENCLOSURE, 240V & 120V YARD RECEPTACLES	MIDWEST ELEC.	2
M5	X	A10106CHFL	ENCLOSURE, STEEL, NEMA 4 AND 12, 10" X 10" X 6", WITH TERM BLOCK	HOFFMAN	16
M5A	X	AGLK2 OR EQUAL	GROUND LUG, FOR CONNECTING ITEM MS TO GROUND GRID	HOFFMAN	16
M5B	X	EB25B06	TERMINAL BLOCK, 6 POLE, FOR USE WITH ITEM MS	GE	16
M5C	X	A10P10	INTERIOR PANEL, FOR ITEM MS	HOFFMAN	16
M11	X	8006553	6.5" X 28" COYOTE SPLICE CASE	PREFORMED	4
M12	X	8003569	CABLE STORAGE ASSEMBLY	PREFORMED	4
M13	X	8003411	SEALANT KIT	PREFORMED	8
M14	X	8003472	VERTICAL MOUNTING KIT	PREFORMED	4
M15	X	80805514	COYOTE SPLICE TRAY, 36 STRAND	PREFORMED	8
M16	X	8003041-H3	DOWNLEAD CUSHION, WITH HARDWARE, STEEL	PREFORMED	48
M17	X	CTSS225500316C	CABLE TIE, STAINLESS STEEL	BURNDY	16
M18	X	SHC1023	CORD CONNECTOR, ALUMINUM, WEATHER TIGHT, 1/2" NPT HUB SIZE, CORD DIAMETER 0.38"-0.5"	HUBBELL	4
S01	X	HAF	STEEL, HAF, 230 KV A-FRAME DEADEND, 2-BAY (EA.)	GALVANIZERS	1
S02	X	LM70	STEEL, LM70, SHIELD MAST (EA.)	GALVANIZERS	2
S03	X	2LS	STEEL, 2LS, 230 KV LOW SWITCH STRUCTURE (EA.)	GALVANIZERS	8
S04	X	2HS	STEEL, 2HS, 230 KV HIGH SWITCH STRUCTURE (EA.)	GALVANIZERS	1
S05	X	2L1	STEEL, 2L1, 230 KV LOW SINGLE PHASE BUS STRUCTURE (EA.)	GALVANIZERS	16
S06	X	2H1	STEEL, 2H1, 230 KV HIGH SINGLE PHASE BUS STRUCTURE (EA.)	GALVANIZERS	7
S07	X	2H1S	STEEL, 2H1S, 230 KV HIGH SINGLE PHASE BUS STRUCTURE, SHORT (5" SHORTER) (EA.)	GALVANIZERS	3
S08	X	CVT	STEEL, CVT, 230 KV SINGLE PHASE CVT STRUCTURE (EA.)	GALVANIZERS	4
S09	X	CVT WITH BOX	STEEL, CVT, 230 KV SINGLE PHASE CVT STRUCTURE, WITH J-BOX MOUNTING PROVISIONS (EA.)	GALVANIZERS	3
S10	X	LAF	STEEL, LAF, 69 KV A-FRAME DEADEND, 2-BAY (EA.)	GALVANIZERS	2
S11	X	6LS	STEEL, 6LS, 69 KV LOW SWITCH STRUCTURE (EA.)	GALVANIZERS	12
S12	X	6HS	STEEL, 6HS, 69 KV HIGH SWITCH STRUCTURE (EA.)	GALVANIZERS	1
S13	X	6L3A	STEEL, 6L3A, 69 KV LOW THREE PHASE BUS STRUCTURE, 45° (EA.)	GALVANIZERS	4
S14	X	6PT	STEEL, 6PT, 69 KV SINGLE PHASE PT STRUCTURE (EA.)	GALVANIZERS	8
S15	X	6PT WITH BOX	STEEL, 6PT, 69 KV SINGLE PHASE PT STRUCTURE, WITH J-BOX MOUNTING PROVISIONS (EA.)	GALVANIZERS	5
S16	X	PPT	STEEL, PPT, 69 KV SINGLE PHASE POWER PT STRUCTURE (EA.)	GALVANIZERS	1
S50	X	--	GATE CLOSER AND LOCK (EA.)	GALVANIZERS	2
S51A	X	--	BUILDING PLATFORM (EA.)	GALVANIZERS	2
S51B	X	--	BUILDING PLATFORM MOUNTING BRACKETS (EA.)	GALVANIZERS	4
S52	X	--	OPERATOR PLATFORM, INCLUDING ADJUSTABLE LEGS (EA.)	GALVANIZERS	37
S53	X	--	CABLE TRENCH LID MOUNTING PROVISION, L 3" X 2" X 1/4" (FT.)	GALVANIZERS	30
S61	X	1" A.B.	ANCHOR BOLT, 1", 1'-3" LONG, WITH NUTS AND WASHERS, SHIPPED UNASSEMBLED, FOR BREAKERS (EA.)	GALVANIZERS	36
S62	X	1" A.B.	ANCHOR BOLT, 1", 3'-3" LONG, WITH NUTS AND WASHERS, SHIPPED UNASSEMBLED (EA.)	GALVANIZERS	468
S63	X	A.B. CAGE	ANCHOR BOLTS, 2", 6'-7" LONG, WITH NUTS AND WASHERS, SHIP ASSEMBLED IN CAGE WITH TEMPLATES TOP AND BOTTOM - FOR HAF STRUCTURE. EIGHT (8) ANCHOR BOLTS PER ASSEMBLY (EA. ASSEMBLY)	GALVANIZERS	6
S64	X	A.B. CAGE	ANCHOR BOLTS, 1.5", 4'-11" LONG, WITH NUTS AND WASHERS, SHIP ASSEMBLED IN CAGE WITH TEMPLATES TOP AND BOTTOM - FOR LM70 STRUCTURE. EIGHT (8) ANCHOR BOLTS PER ASSEMBLY (EA. ASSEMBLY)	GALVANIZERS	2
S65	X	A.B. CAGE	ANCHOR BOLTS, 1.5", 4'-11" LONG, WITH NUTS AND WASHERS, SHIP ASSEMBLED IN CAGE WITH TEMPLATES TOP AND BOTTOM - FOR LAF STRUCTURE. SIX (6) ANCHOR BOLTS PER ASSEMBLY (EA. ASSEMBLY)	GALVANIZERS	12
Z1	X	BHP0002010	FENCE SIGN, STATION NAME	ELECTROMARK	2
Z2	X	BHP0002005	FENCE SIGN, WARNING	ELECTROMARK	32
Z4	X	BHP0002004	FENCE SIGN, PPE REQUIRED	ELECTROMARK	2
Z6	X	S359-L	FENCE SIGN MOUNTING BRACKET (PAIR)	ELECTROMARK	72
Z7	X	SEE DWG WRC-C-389	NAMEPLATE SIGNS, FOR BREAKERS, SWITCHES, XFMR, PTD'S, SSD'S AND MISCELLANEOUS YARD EQUIPMENT		1 LOT

NOTES:

1. SEE PROJECT SPECIFICATIONS AND DETAIL DRAWINGS FOR FURTHER MATERIAL DETAILS AS NEEDED.
2. SUPPLIER SHALL BE RESPONSIBLE FOR PROVIDING OFM QUANTITIES AS REQUIRED TO COMPLETE THE PROJECT.
3. QUANTITIES OF CONTRACTOR-FURNISHED MATERIALS SHALL BE VERIFIED BY CONTRACTOR.
4. OWNER SHALL BE NOTIFIED OF ANY QUANTITIES THAT MAY BE SHOWN INCORRECTLY ON THIS DRAWING.

DATE	DRAWN BY	NO.	APPROVED BY	REVISION DESCRIPTION
06-20	KLV	1	PDK	CONFORMING TO CONSTRUCTION RECORDS
01-19	KLV	0	PDK	FOR CONSTRUCTION

BLACK HILLS ENERGY

WEST RAPID CITY SUBSTATION

MATERIAL LIST

DRAWN BY KLV DATE 01-19 DWG NO. WRC-C-381 SECTION NO. 1

APPROVED BY PDK DATE 01-19

DGR ENGINEERING

ROCK RAPIDS, IOWA
(712) 472-2531

P:\04233\00\DWG\RECORD\WRC\CAD\WRC-C-381.DWG

NP ID	QTY.	NP LINE #1	NP LINE #2 (IF APPLICABLE)	NP LINE #3 (IF APPLICABLE)	NP SIZE	TEXT SIZE	BACKGROUND COLOR	TEXT COLOR	MANUFACTURER	STYLE/PART #	NP LOCATION	NOTES
Y1	1	XFMR T1			2" X 1"	1.5"	YELLOW	BLACK			TRANSFORMER CABINET	NAMEPLATES ARE INDIVIDUAL CHARACTERS; WITH HOLDER AS NEEDED.
Y2	1	23460			2" X 1"	1.5"	YELLOW	BLACK			STEEL BY SWITCH OPERATOR	NAMEPLATES ARE INDIVIDUAL CHARACTERS; WITH HOLDER AS NEEDED.
Y3	1	23462			2" X 1"	1.5"	YELLOW	BLACK			STEEL BY SWITCH OPERATOR	NAMEPLATES ARE INDIVIDUAL CHARACTERS; WITH HOLDER AS NEEDED.
Y4	1	23463			2" X 1"	1.5"	YELLOW	BLACK			STEEL BY SWITCH OPERATOR	NAMEPLATES ARE INDIVIDUAL CHARACTERS; WITH HOLDER AS NEEDED.
Y5	1	23464			2" X 1"	1.5"	YELLOW	BLACK			BREAKER CABINET	NAMEPLATES ARE INDIVIDUAL CHARACTERS; WITH HOLDER AS NEEDED.
Y6	1	23465			2" X 1"	1.5"	YELLOW	BLACK			STEEL BY SWITCH OPERATOR	NAMEPLATES ARE INDIVIDUAL CHARACTERS; WITH HOLDER AS NEEDED.
Y7	1	23466			2" X 1"	1.5"	YELLOW	BLACK			STEEL BY SWITCH OPERATOR	NAMEPLATES ARE INDIVIDUAL CHARACTERS; WITH HOLDER AS NEEDED.
Y8	1	23467			2" X 1"	1.5"	YELLOW	BLACK			BREAKER CABINET	NAMEPLATES ARE INDIVIDUAL CHARACTERS; WITH HOLDER AS NEEDED.
Y9	1	23468			2" X 1"	1.5"	YELLOW	BLACK			STEEL BY SWITCH OPERATOR	NAMEPLATES ARE INDIVIDUAL CHARACTERS; WITH HOLDER AS NEEDED.
Y10	1	23469			2" X 1"	1.5"	YELLOW	BLACK			STEEL BY SWITCH OPERATOR	NAMEPLATES ARE INDIVIDUAL CHARACTERS; WITH HOLDER AS NEEDED.
Y11	1	23470			2" X 1"	1.5"	YELLOW	BLACK			BREAKER CABINET	NAMEPLATES ARE INDIVIDUAL CHARACTERS; WITH HOLDER AS NEEDED.
Y12	1	23471			2" X 1"	1.5"	YELLOW	BLACK			STEEL BY SWITCH OPERATOR	NAMEPLATES ARE INDIVIDUAL CHARACTERS; WITH HOLDER AS NEEDED.
Y13	1	23472			2" X 1"	1.5"	YELLOW	BLACK			STEEL BY SWITCH OPERATOR	NAMEPLATES ARE INDIVIDUAL CHARACTERS; WITH HOLDER AS NEEDED.
Y14	1	23474			2" X 1"	1.5"	YELLOW	BLACK			STEEL BY SWITCH OPERATOR	NAMEPLATES ARE INDIVIDUAL CHARACTERS; WITH HOLDER AS NEEDED.
Y15	1	23475			2" X 1"	1.5"	YELLOW	BLACK			STEEL BY SWITCH OPERATOR	NAMEPLATES ARE INDIVIDUAL CHARACTERS; WITH HOLDER AS NEEDED.
Y16	1	6WR00			2" X 1"	1.5"	YELLOW	BLACK			STEEL BY SWITCH OPERATOR	NAMEPLATES ARE INDIVIDUAL CHARACTERS; WITH HOLDER AS NEEDED.
Y17	1	6WR01			2" X 1"	1.5"	YELLOW	BLACK			BREAKER CABINET	NAMEPLATES ARE INDIVIDUAL CHARACTERS; WITH HOLDER AS NEEDED.
Y18	1	6WR02			2" X 1"	1.5"	YELLOW	BLACK			STEEL BY SWITCH OPERATOR	NAMEPLATES ARE INDIVIDUAL CHARACTERS; WITH HOLDER AS NEEDED.
Y19	1	6WR03			2" X 1"	1.5"	YELLOW	BLACK			STEEL BY SWITCH OPERATOR	NAMEPLATES ARE INDIVIDUAL CHARACTERS; WITH HOLDER AS NEEDED.
Y20	1	6WR04			2" X 1"	1.5"	YELLOW	BLACK			BREAKER CABINET	NAMEPLATES ARE INDIVIDUAL CHARACTERS; WITH HOLDER AS NEEDED.
Y21	1	6WR05			2" X 1"	1.5"	YELLOW	BLACK			STEEL BY SWITCH OPERATOR	NAMEPLATES ARE INDIVIDUAL CHARACTERS; WITH HOLDER AS NEEDED.
Y22	1	6WR06			2" X 1"	1.5"	YELLOW	BLACK			STEEL BY SWITCH OPERATOR	NAMEPLATES ARE INDIVIDUAL CHARACTERS; WITH HOLDER AS NEEDED.
Y23	1	6WR07			2" X 1"	1.5"	YELLOW	BLACK			BREAKER CABINET	NAMEPLATES ARE INDIVIDUAL CHARACTERS; WITH HOLDER AS NEEDED.
Y24	1	6WR08			2" X 1"	1.5"	YELLOW	BLACK			STEEL BY SWITCH OPERATOR	NAMEPLATES ARE INDIVIDUAL CHARACTERS; WITH HOLDER AS NEEDED.
Y25	1	6WR09			2" X 1"	1.5"	YELLOW	BLACK			STEEL BY SWITCH OPERATOR	NAMEPLATES ARE INDIVIDUAL CHARACTERS; WITH HOLDER AS NEEDED.
Y26	1	6WR10			2" X 1"	1.5"	YELLOW	BLACK			BREAKER CABINET	NAMEPLATES ARE INDIVIDUAL CHARACTERS; WITH HOLDER AS NEEDED.
Y27	1	6WR11			2" X 1"	1.5"	YELLOW	BLACK			STEEL BY SWITCH OPERATOR	NAMEPLATES ARE INDIVIDUAL CHARACTERS; WITH HOLDER AS NEEDED.
Y28	1	6WR12			2" X 1"	1.5"	YELLOW	BLACK			STEEL BY SWITCH OPERATOR	NAMEPLATES ARE INDIVIDUAL CHARACTERS; WITH HOLDER AS NEEDED.
Y29	1	6WR13			2" X 1"	1.5"	YELLOW	BLACK			BREAKER CABINET	NAMEPLATES ARE INDIVIDUAL CHARACTERS; WITH HOLDER AS NEEDED.
Y30	1	6WR14			2" X 1"	1.5"	YELLOW	BLACK			STEEL BY SWITCH OPERATOR	NAMEPLATES ARE INDIVIDUAL CHARACTERS; WITH HOLDER AS NEEDED.
Y31	1	6WR15			2" X 1"	1.5"	YELLOW	BLACK			STEEL BY SWITCH OPERATOR	NAMEPLATES ARE INDIVIDUAL CHARACTERS; WITH HOLDER AS NEEDED.
Y32	1	6WR16			2" X 1"	1.5"	YELLOW	BLACK			BREAKER CABINET	NAMEPLATES ARE INDIVIDUAL CHARACTERS; WITH HOLDER AS NEEDED.
Y33	1	6WR17			2" X 1"	1.5"	YELLOW	BLACK			STEEL BY SWITCH OPERATOR	NAMEPLATES ARE INDIVIDUAL CHARACTERS; WITH HOLDER AS NEEDED.
Y34	1	6WR18			2" X 1"	1.5"	YELLOW	BLACK			STEEL BY SWITCH OPERATOR	NAMEPLATES ARE INDIVIDUAL CHARACTERS; WITH HOLDER AS NEEDED.
Y35	1	6WR19			2" X 1"	1.5"	YELLOW	BLACK			STEEL BY SWITCH OPERATOR	NAMEPLATES ARE INDIVIDUAL CHARACTERS; WITH HOLDER AS NEEDED.
Y36	1	6WR20			2" X 1"	1.5"	YELLOW	BLACK			STEEL BY SWITCH OPERATOR	NAMEPLATES ARE INDIVIDUAL CHARACTERS; WITH HOLDER AS NEEDED.
Y37	1	6WR21			2" X 1"	1.5"	YELLOW	BLACK			STEEL BY SWITCH OPERATOR	NAMEPLATES ARE INDIVIDUAL CHARACTERS; WITH HOLDER AS NEEDED.
Y38	1	6WR22			2" X 1"	1.5"	YELLOW	BLACK			STEEL BY SWITCH OPERATOR	NAMEPLATES ARE INDIVIDUAL CHARACTERS; WITH HOLDER AS NEEDED.
Y41	1	CCVT-LNG			2" X 1"	1.5"	YELLOW	BLACK			CCVT J-BOX	NAMEPLATES ARE INDIVIDUAL CHARACTERS; WITH HOLDER AS NEEDED.
Y42	1	PTD1P			2" X 1"	1.5"	YELLOW	BLACK			PRIMARY RELAYING DISCONNECT	NAMEPLATES ARE INDIVIDUAL CHARACTERS; WITH HOLDER AS NEEDED.
Y43	1	PTD1B			2" X 1"	1.5"	YELLOW	BLACK			BACKUP RELAYING DISCONNECT	NAMEPLATES ARE INDIVIDUAL CHARACTERS; WITH HOLDER AS NEEDED.
Y44	1	CCVT-SRC			2" X 1"	1.5"	YELLOW	BLACK			CCVT J-BOX	NAMEPLATES ARE INDIVIDUAL CHARACTERS; WITH HOLDER AS NEEDED.
Y45	1	PTD2P			2" X 1"	1.5"	YELLOW	BLACK			PRIMARY RELAYING DISCONNECT	NAMEPLATES ARE INDIVIDUAL CHARACTERS; WITH HOLDER AS NEEDED.
Y46	1	PTD2B			2" X 1"	1.5"	YELLOW	BLACK			BACKUP RELAYING DISCONNECT	NAMEPLATES ARE INDIVIDUAL CHARACTERS; WITH HOLDER AS NEEDED.
Y47	1	CCVT-T1			2" X 1"	1.5"	YELLOW	BLACK			CCVT J-BOX	NAMEPLATES ARE INDIVIDUAL CHARACTERS; WITH HOLDER AS NEEDED.
Y48	1	PTD3			2" X 1"	1.5"	YELLOW	BLACK			RELAYING DISCONNECT	NAMEPLATES ARE INDIVIDUAL CHARACTERS; WITH HOLDER AS NEEDED.
Y49	1	PT-B1			2" X 1"	1.5"	YELLOW	BLACK			PT J-BOX	NAMEPLATES ARE INDIVIDUAL CHARACTERS; WITH HOLDER AS NEEDED.

NP ID	QTY.	NP LINE #1	NP LINE #2 (IF APPLICABLE)	NP LINE #3 (IF APPLICABLE)	NP SIZE	TEXT SIZE	BACKGROUND COLOR	TEXT COLOR	MANUFACTURER	STYLE/PART #	NP LOCATION	NOTES
Y50	1	PTD5			2" X 1"	1.5"	YELLOW	BLACK			RELAYING DISCONNECT	NAMEPLATES ARE INDIVIDUAL CHARACTERS; WITH HOLDER AS NEEDED.
Y51	1	PT-CT4			2" X 1"	1.5"	YELLOW	BLACK			PT J-BOX	NAMEPLATES ARE INDIVIDUAL CHARACTERS; WITH HOLDER AS NEEDED.
Y52	1	PTD6P			2" X 1"	1.5"	YELLOW	BLACK			PRIMARY RELAYING DISCONNECT	NAMEPLATES ARE INDIVIDUAL CHARACTERS; WITH HOLDER AS NEEDED.
Y53	1	PTD6B			2" X 1"	1.5"	YELLOW	BLACK			BACKUP RELAYING DISCONNECT	NAMEPLATES ARE INDIVIDUAL CHARACTERS; WITH HOLDER AS NEEDED.
Y54	1	PT-LNG3			2" X 1"	1.5"	YELLOW	BLACK			PT J-BOX	NAMEPLATES ARE INDIVIDUAL CHARACTERS; WITH HOLDER AS NEEDED.
Y55	1	PTD7P			2" X 1"	1.5"	YELLOW	BLACK			PRIMARY RELAYING DISCONNECT	NAMEPLATES ARE INDIVIDUAL CHARACTERS; WITH HOLDER AS NEEDED.
Y56	1	PTD7B			2" X 1"	1.5"	YELLOW	BLACK			BACKUP RELAYING DISCONNECT	NAMEPLATES ARE INDIVIDUAL CHARACTERS; WITH HOLDER AS NEEDED.
Y57	1	PT-B2			2" X 1"	1.5"	YELLOW	BLACK			PT J-BOX	NAMEPLATES ARE INDIVIDUAL CHARACTERS; WITH HOLDER AS NEEDED.
Y58	1	PTD8			2" X 1"	1.5"	YELLOW	BLACK			RELAYING DISCONNECT	NAMEPLATES ARE INDIVIDUAL CHARACTERS; WITH HOLDER AS NEEDED.
Y59	1	PT-BF2			2" X 1"	1.5"	YELLOW	BLACK			PT J-BOX	NAMEPLATES ARE INDIVIDUAL CHARACTERS; WITH HOLDER AS NEEDED.
Y60	1	PTD9P			2" X 1"	1.5"	YELLOW	BLACK			PRIMARY RELAYING DISCONNECT	NAMEPLATES ARE INDIVIDUAL CHARACTERS; WITH HOLDER AS NEEDED.
Y61	1	PTD9B			2" X 1"	1.5"	YELLOW	BLACK			BACKUP RELAYING DISCONNECT	NAMEPLATES ARE INDIVIDUAL CHARACTERS; WITH HOLDER AS NEEDED.
Y62	1	PT-BF1			2" X 1"	1.5"	YELLOW	BLACK			PT J-BOX	NAMEPLATES ARE INDIVIDUAL CHARACTERS; WITH HOLDER AS NEEDED.
Y63	1	PTD10P			2" X 1"	1.5"	YELLOW	BLACK			PRIMARY RELAYING DISCONNECT	NAMEPLATES ARE INDIVIDUAL CHARACTERS; WITH HOLDER AS NEEDED.
Y64	1	PTD10B			2" X 1"	1.5"	YELLOW	BLACK			BACKUP RELAYING DISCONNECT	NAMEPLATES ARE INDIVIDUAL CHARACTERS; WITH HOLDER AS NEEDED.
Y71	1	SSD1			2" X 1"	1.5"	YELLOW	BLACK			PPT STATION POWER DISCONNECT	NAMEPLATES ARE INDIVIDUAL CHARACTERS; WITH HOLDER AS NEEDED.
Y75	1	RCPT1			2" X 1"	1.5"	YELLOW	BLACK			RECPT. BOX #1	NAMEPLATES ARE INDIVIDUAL CHARACTERS; WITH HOLDER AS NEEDED.
Y76	1	RCPT2			2" X 1"	1.5"	YELLOW	BLACK			RECPT. BOX #2	NAMEPLATES ARE INDIVIDUAL CHARACTERS; WITH HOLDER AS NEEDED.
Y81	1	YL1			2" X 1"	1.5"	YELLOW	BLACK			YARD LIGHT J-BOX	NAMEPLATES ARE INDIVIDUAL CHARACTERS; WITH HOLDER AS NEEDED.
Y82	1	YL2			2" X 1"	1.5"	YELLOW	BLACK			YARD LIGHT J-BOX	NAMEPLATES ARE INDIVIDUAL CHARACTERS; WITH HOLDER AS NEEDED.
Y83	1	YL3			2" X 1"	1.5"	YELLOW	BLACK			YARD LIGHT J-BOX	NAMEPLATES ARE INDIVIDUAL CHARACTERS; WITH HOLDER AS NEEDED.
Y84	1	YL4			2" X 1"	1.5"	YELLOW	BLACK			YARD LIGHT J-BOX	NAMEPLATES ARE INDIVIDUAL CHARACTERS; WITH HOLDER AS NEEDED.
Y85	1	YL5			2" X 1"	1.5"	YELLOW	BLACK			YARD LIGHT J-BOX	NAMEPLATES ARE INDIVIDUAL CHARACTERS; WITH HOLDER AS NEEDED.
Y86	1	YL6			2" X 1"	1.5"	YELLOW	BLACK			YARD LIGHT J-BOX	NAMEPLATES ARE INDIVIDUAL CHARACTERS; WITH HOLDER AS NEEDED.
Y87	1	YL7			2" X 1"	1.5"	YELLOW	BLACK			YARD LIGHT J-BOX	NAMEPLATES ARE INDIVIDUAL CHARACTERS; WITH HOLDER AS NEEDED.
Y88	1	YL8			2" X 1"	1.5"	YELLOW	BLACK			YARD LIGHT J-BOX	NAMEPLATES ARE INDIVIDUAL CHARACTERS; WITH HOLDER AS NEEDED.
Y89	1	YL9			2" X 1"	1.5"	YELLOW	BLACK			YARD LIGHT J-BOX	NAMEPLATES ARE INDIVIDUAL CHARACTERS; WITH HOLDER AS NEEDED.
Y90	1	YL10			2" X 1"	1.5"	YELLOW	BLACK			YARD LIGHT J-BOX	NAMEPLATES ARE INDIVIDUAL CHARACTERS; WITH HOLDER AS NEEDED.
Y91	1	YL11			2" X 1"	1.5"	YELLOW	BLACK			YARD LIGHT J-BOX	NAMEPLATES ARE INDIVIDUAL CHARACTERS; WITH HOLDER AS NEEDED.
Y92	1	YL12			2" X 1"	1.5"	YELLOW	BLACK			YARD LIGHT J-BOX	NAMEPLATES ARE INDIVIDUAL CHARACTERS; WITH HOLDER AS NEEDED.
Y93	1	YL13			2" X 1"	1.5"	YELLOW	BLACK			YARD LIGHT J-BOX	NAMEPLATES ARE INDIVIDUAL CHARACTERS; WITH HOLDER AS NEEDED.
Y94	1	YL14			2" X 1"	1.5"	YELLOW	BLACK			YARD LIGHT J-BOX	NAMEPLATES ARE INDIVIDUAL CHARACTERS; WITH HOLDER AS NEEDED.
Y95	1	YL15			2" X 1"	1.5"	YELLOW	BLACK			YARD LIGHT J-BOX	NAMEPLATES ARE INDIVIDUAL CHARACTERS; WITH HOLDER AS NEEDED.
Y96	1	YL16			2" X 1"	1.5"	YELLOW	BLACK			YARD LIGHT J-BOX	NAMEPLATES ARE INDIVIDUAL CHARACTERS; WITH HOLDER AS NEEDED.
Y97	9	A			4" X 2"	3"	RED	BLACK	BHE CATALOG	PHASEA2ZD,A	SEE NOTE 3 FOR LOCATIONS	WITH HOLDER AS NEEDED.
Y98	10	B			4" X 2"	3"	WHITE	BLACK	BHE CATALOG	PHASEA2ZD,B	SEE NOTE 3 FOR LOCATIONS	WITH HOLDER AS NEEDED.
Y99	9	C			4" X 2"	3"	BLUE	BLACK	BHE CATALOG	PHASEA2ZD,C	SEE NOTE 3 FOR LOCATIONS	WITH HOLDER AS NEEDED.

NOTES:

1. OWNER'S SUPPLIER TO SUBMIT NAMEPLATE DRAWING SHOWING ALL NAMEPLATES FOR OWNER APPROVAL PRIOR TO FABRICATION.

2. OWNER'S SUPPLIER TO FURNISH; CONTRACTOR TO INSTALL.

3. INSTALL PHASE LABELS AT THE FOLLOWING LOCATIONS: T-LINE DEADENDS; ON TRANSFORMER HIGHSIDE, LOWSIDE AND TERTIARY SIDE VISIBLE FROM THE TRANSFORMER; AT 230 KV SINGLE-PHASE CVT (B ONLY).

P:\042330\00\DWG\RECORD\WRC\CAD\WRC-C-389.DWG

DGR ENGINEERING
ROCK RAPIDS, IOWA
(712) 472-2531

DATE	DRAWN BY	NO.	APPROVED BY	REVISION DESCRIPTION
06-20	KLV	1	PDK	CONFORMING TO CONSTRUCTION RECORDS
01-19	KLV	0	PDK	FOR CONSTRUCTION

BLACK HILLS ENERGY

WEST RAPID CITY SUBSTATION

NAMEPLATES
YARD EQUIPMENT

DRAWN BY KLV DATE 01-19
APPROVED BY PDK DATE 01-19
DWG NO. WRC-C-389 REVISION 1

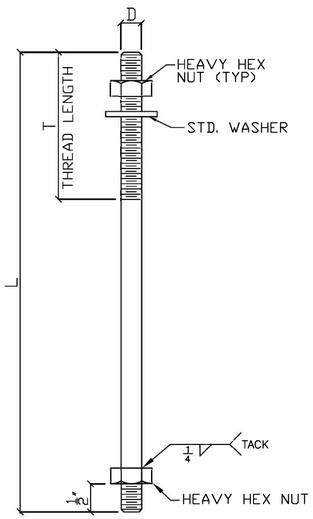

ANCHOR BOLT
TYPE A

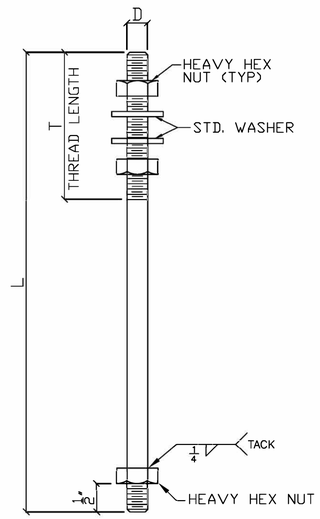

ANCHOR BOLT
TYPE B

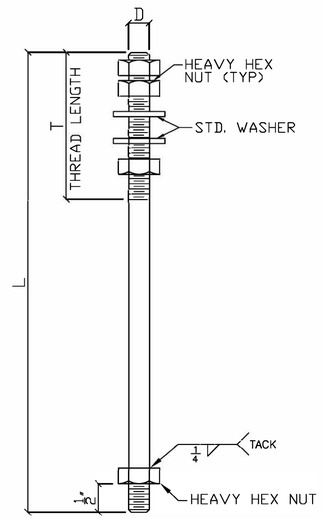

ANCHOR BOLT
TYPE C

	NO REQ'D	MARK NO	ITEM	D	L	T	UNIT WT (LBS)
1	40	AB-1	ANCHOR BOLT TYPE A	1"	1'-3"	3"	4.2
	468	AB-3	ANCHOR BOLT TYPE B	1"	3'-3"	6"	10.8
	88	AB-4	ANCHOR BOLT TYPE C	1 1/2"	4'-11"	8"	35.6
	48	AB-6	ANCHOR BOLT TYPE C	2"	6'-7"	10"	83.6
			TOTAL BLACK WEIGHT				1 12368.0
			ADD 3 1/2% FOR GALVANIZING				1 432.9
			TOTAL GALVANIZED WEIGHT				1 12800.9

TOTAL WEIGHT = 12,800.9
1

NOTES:

1. ALL ROD - F1554 GR. 55 UNO
2. GALV. AFTER FAB. PER ASTM A123
3. ALL ANCHOR BOLTS TO INCLUDE STD. WASHERS AND HEAVY HEX NUTS AS NOTED
4. PROJ. EQUALS THREAD LENGTH.

GALVANIZERS, INC.
RELEASED FOR CONSTRUCTION

DATE	SYM	REVISION RECORD	AUTH.	DR.	CK.
1/23/19	1	AS PER APPROVAL		SLK	
		ADDED (4) AB-1 FOR FUTURE 230KV			

BLACK HILLS POWER INC.
WEST RAPID CITY SUBSTATION
P.O. NO: 5010015188
RAPID CITY, SD
SPEC. NO.: SANDMAN STRUCTURAL ENG.
REF. DWG.: SBR-C-209

GALVANIZERS, INC.

BLACK HILLS POWER

DRAWN BY	CHECKED BY
SLK	SLK
FILE NAME RCSD01	CHECK DATE: 1/2/19

TITLE
ANCHOR BOLTS

DATE 1/2/19

DRAWING NUMBER
19-RCSD-01

P:\04233\00\DWG\RECORD\WRC\CAD\WRC-C-400A.DWG

DGR ENGINEERING
ROCK RAPIDS, IOWA
(712) 472-2531

DATE	DRAWN BY	NO.	APPROVED BY	REVISION DESCRIPTION
06-20	KLV	1	PDK	CONFORMING TO CONSTRUCTION RECORDS
10-19	SMW	0	PDK	FOR CONSTRUCTION

BLACK HILLS ENERGY
WEST RAPID SUBSTATION
STEEL DETAILS
ANCHOR BOLTS

DRAWN BY SMW DATE 10-19
APPROVED BY PDK DATE 10-19
DWG NO. WRC-C-400A REVISION 1

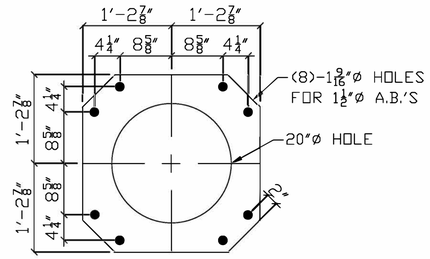

MARK 02C

PL 3/8x29 3/4x 2'-5 3/4"
(TOP & BOTTOM TEMPLATE)
(LIGHTNING MAST - LM70)

BILL OF MATERIAL

NO PCS	MATERIAL	LG FT	LG IN	MK	REMARK	TOTAL WT BLACK
4	PL 3/8x29 3/4	2	5 3/4	02C	DO NOT GALV.	376.4
12	PL 3/8x31 1/4	2	7 1/4	02D	DO NOT GALV.	1245.6
24	PL 3/8x14	1	7	02F	DO NOT GALV.	679.2
					TOTAL WT.	2301.2

TOTAL WEIGHT = 2,301.2

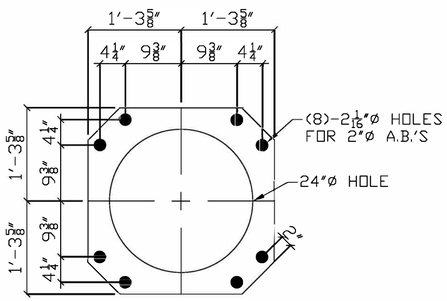

MARK 02D

PL 3/8x31 1/4x 2'-7 1/4"
(TOP & BOTTOM TEMPLATE)
(230kV A-FRAME - HAF)

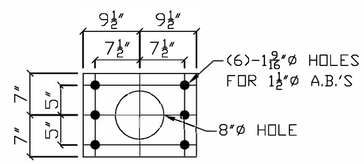

MARK 02F

PL 3/8x14x 1'-7"
(TOP & BOTTOM TEMPLATE)
(69kV A-FRAME - LAF)

NOTES:
1. ALL PLATE - ASTM A36 U.N.O.

GALVANIZERS, INC.
RELEASED FOR CONSTRUCTION

DATE	SYM	REVISION RECORD	AUTH.	DR.	CK.

BLACK HILLS POWER INC.
WEST RAPID CITY SUBSTATION
P.O. NO: 5010015188
RAPID CITY, SD
SPEC. NO.: SANDMAN STRUCTURAL ENG.
REF. DWG.:

GALVANIZERS, INC.

BLACK HILLS POWER

DRAWN BY	CHECKED BY
SLK	SLK
FILE NAME RCSD02	CHECK DATE: 1/2/19

TITLE: ANCHOR BOLT TEMPLATES

DATE: 1/2/19

DRAWING NUMBER: 19-RCSD-02

P:\04\233\00\DWG\RECORD\WRC\CAD\WRC-C-400B.DWG

DGR ENGINEERING
ROCK RAPIDS, IOWA
(712) 472-2531

DATE	DRAWN BY	NO.	APPROVED BY	REVISION DESCRIPTION
06-20	KLV	1	PDK	CONFORMING TO CONSTRUCTION RECORDS
10-19	SMW	0	PDK	FOR CONSTRUCTION

BLACK HILLS ENERGY

WEST RAPID SUBSTATION

STEEL DETAILS
ANCHOR BOLTS

DRAWN BY SMW DATE 10-19
APPROVED BY PDK DATE 10-19
DWG NO. WRC-C-400B REVISION 1

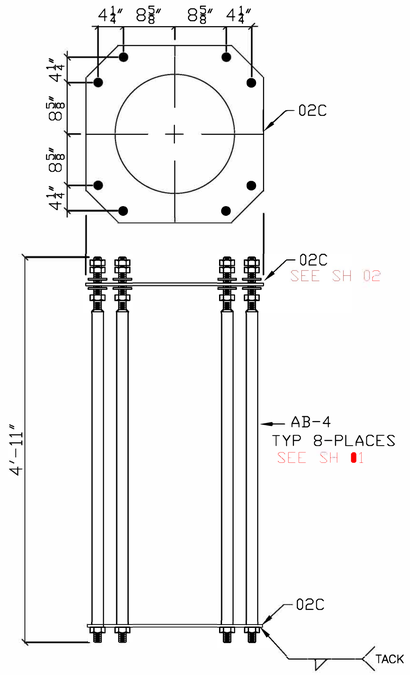

WELDMENT 03B
2 - REQUIRED
(LIGHTNING MAST - LM70)

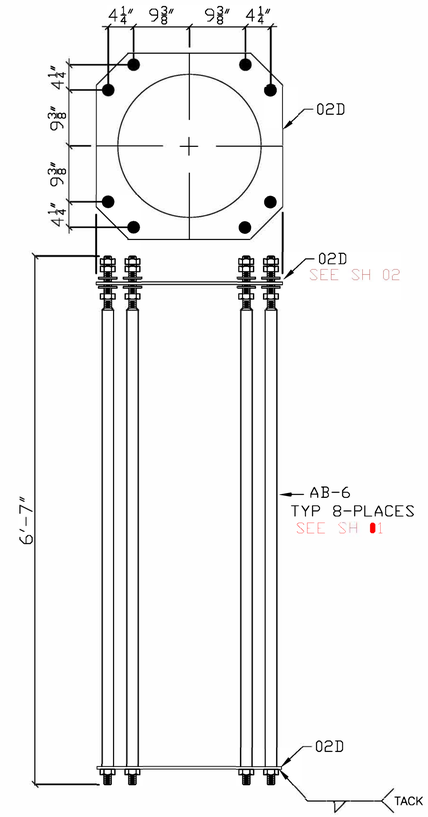

WELDMENT 03C
6 - REQUIRED
(230kV A-FRAME - HAF)

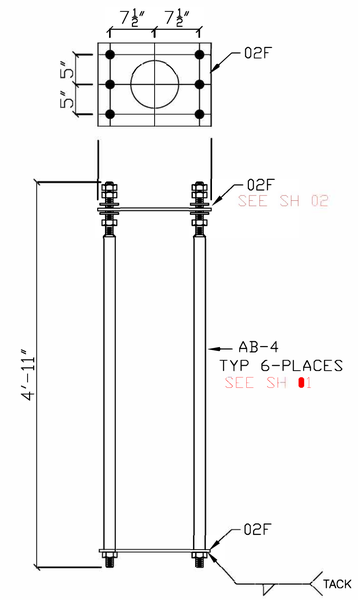

WELDMENT 03D
12 - REQUIRED
(69kV A-FRAME - LAF)

NOTES:

1. FOR AB DETAIL SEE SHEET 01
2. FOR TEMPLATE DETAIL SEE SHEET 02
3. WORK W/ SHEETS 01 & 02

GALVANIZERS, INC.
RELEASED FOR CONSTRUCTION

DATE	SYM	REVISION RECORD	AUTH.	DR.	CK.

BLACK HILLS POWER INC.
WEST RAPID CITY SUBSTATION
P.O. NO: 5010015188
RAPID CITY, SD
SPEC. NO.: SANDMAN STRUCTURAL ENG.
REF. DWG.:

GALVANIZERS, INC.

BLACK HILLS POWER

DRAWN BY	CHECKED BY
SLK	SLK
FILE NAME RCSD03	CHECK DATE: 1/2/19

TITLE
ANCHOR BOLT CAGES

DATE 1/2/19

DRAWING NUMBER 19-RCSD-03

P:\04233\00\DWG\RECORD\WRC\CAD\WRC-C-400C.DWG

DGR ENGINEERING
ROCK RAPIDS, IOWA
(712) 472-2531

DATE	DRAWN BY	NO.	APPROVED BY	REVISION DESCRIPTION
06-20	KLV	1	PDK	CONFORMING TO CONSTRUCTION RECORDS
10-19	SMW	0	PDK	FOR CONSTRUCTION

BLACK HILLS ENERGY
WEST RAPID SUBSTATION
STEEL DETAILS
ANCHOR BOLTS

DRAWN BY SMW DATE 10-19
APPROVED BY PDK DATE 10-19
DWG NO. WRC-C-400C
SHEET 1 OF 1

BILL OF MATERIAL

NO PCS	MATERIAL	LG FT	LG IN	MK	REMARK	TOTAL WT BLACK
1	L 3x2x1/4	15	0	04	SHIP LOOSE	△2 61.5
					SUBTOTAL	△2 61.5
					3 1/2% GALV.	△2 2.2
TOTAL WEIGHT PER UNIT						△2 63.7

△2 2 REQUIRED
TOTAL WEIGHT = 127.4
△2

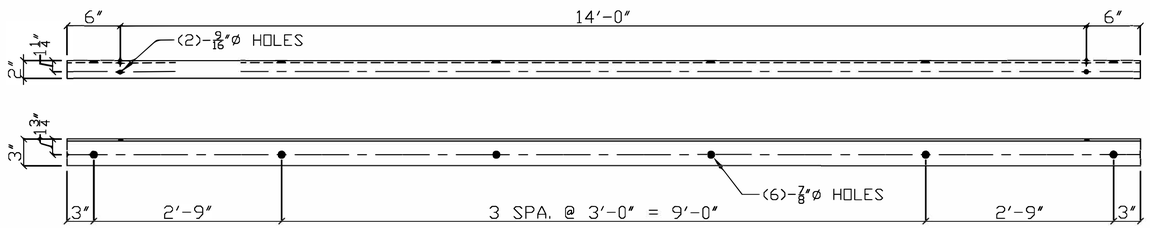

MARK 04
L 3x2x1/4x 15'-0" △2
(SHIP LOOSE)

NOTES:

1. ALL TUBE - ASTM A500, GR. B
2. ALL W-SHAPES - ASTM A992 GR 50
3. ALL PL 1/2" & THICKER - GR 50 UNO
   ALL OTHER PL & SHAPES - A36 UNO
4. ALL HOLES AS NOTED
5. GALV. AFTER FABRICATION PER ASTM A123.
6. START & STOP WELDS @ ℄ OF TUBES & OCTAGONS.

GALVANIZERS, INC.
RELEASED FOR CONSTRUCTION

DATE	SYM	REVISION RECORD	AUTH.	DR.	CK.
1/23/19	△1	AS PER APPROVAL		SLK	
		CHANGED TO L 3x3x1/4			
2/21/19	△2	AS PER EMAIL		SLK	
		CHANGED BACK TO L 3x2x1/4			

BLACK HILLS POWER INC.
WEST RAPID CITY SUBSTATION
P.O. NO: 5010015188
RAPID CITY, SD
SPEC. NO.: SANDMAN STRUCTURAL ENG.
REF. DWG.: SKETCH

GALVANIZERS, INC.

BLACK HILLS POWER

DRAWN BY	CHECKED BY
SLK	SLK
FILE NAME RCSD04	CHECK DATE: 1/2/19

TITLE
CABLE TRENCH LID SUPPORT ANGLE

DATE 1/2/19
DRAWING NUMBER 19-RCSD-04

P:\04233\00\DWG\RECORD\WRC\CAD\WRC-C-401.DWG

DGR ENGINEERING
ROCK RAPIDS, IOWA
(712) 472-2531

DATE	DRAWN BY	NO.	APPROVED BY	REVISION DESCRIPTION
06-20	KLV	1	PDK	CONFORMING TO CONSTRUCTION RECORDS
10-19	SMW	0	PDK	FOR CONSTRUCTION

BLACK HILLS ENERGY
WEST RAPID SUBSTATION
STEEL DETAILS
CABLE TRENCH LID SUPPORT

DRAWN BY SMW DATE 10-19
APPROVED BY PDK DATE 10-19
DWG NO. WRC-C-401
SCALE: NTS
REV 1

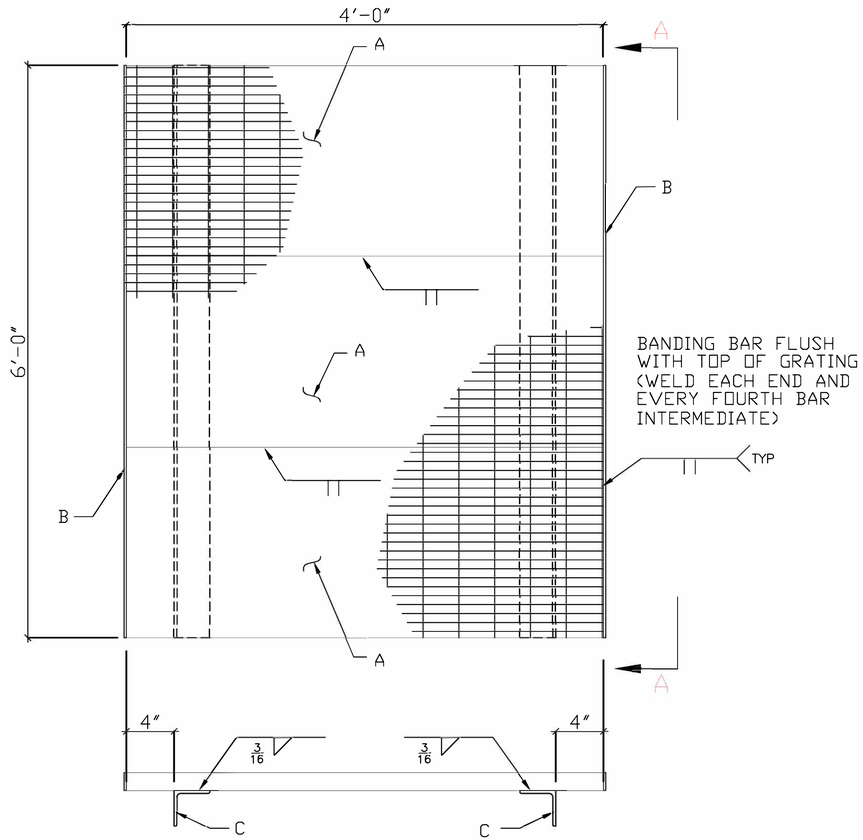

WELDMENT 05

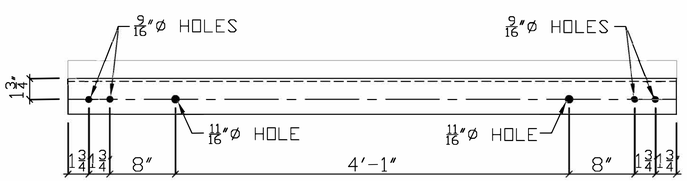

SECTION A-A

BILL OF MATERIAL

NO PCS	MATERIAL	LG FT	LG IN	MK	REMARK	TOTAL WT BLACK
1	WELDMENT			05		
1	GR 2'-0"	4	0	05		84.8
2	GR 2'-0"	4	0	A05		169.6
2	FB 3/16x1 1/2	6	0	B05	BANDING	11.6
2	L 3x3x3/8	6	0	C05		86.4
					SUBTOTAL	352.4
					3 1/2% GALV.	12.3
					TOTAL WEIGHT PER UNIT	364.7

2 REQUIRED
TOTAL WEIGHT = 729.4

NOTES:

1. ALL ANGLE - ASTM A36
2. GALV. AFTER FABRICATION PER ASTM A123
3. SERRATED GRATING - 1 1/2" x 3/16" BARS 1 3/16" C TO C

GALVANIZERS, INC.
RELEASED FOR CONSTRUCTION

DATE	SYM	REVISION RECORD	AUTH.	DR.	CK.

BLACK HILLS POWER INC.
WEST RAPID CITY SUBSTATION
P.O. NO: 5010015188
RAPID CITY, SD
SPEC. NO.: SANDMAN STRUCTURAL ENG.
REF. DWG.: 16-CW-05

GALVANIZERS, INC.

BLACK HILLS POWER

DRAWN BY SLK | CHECKED BY SLK
FILE NAME RCSD05 | CHECK DATE: 1/2/19

TITLE
BUILDING PLATFORM

DATE 1/2/19
DRAWING NUMBER 19-RCSD-05

P:\04\233\00\DWG\RECORD\WRC\CAD\WRC-C-402A.DWG

DGR ENGINEERING
ROCK RAPIDS, IOWA
(712) 472-2531

DATE	DRAWN BY	NO.	APPROVED BY	REVISION DESCRIPTION
06-20	KLV	1	PDK	CONFORMING TO CONSTRUCTION RECORDS
10-19	SMW	0	PDK	FOR CONSTRUCTION

BLACK HILLS ENERGY
WEST RAPID SUBSTATION
STEEL DETAILS
BUILDING PLATFORM

DRAWN BY SMW DATE 10-19
APPROVED BY PDK DATE 10-19
DWG NO. WRC-C-402A REVISION 1

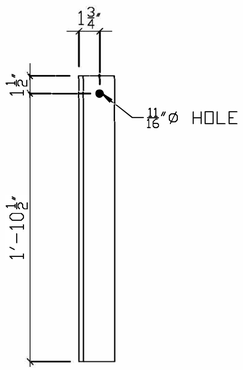

MARK 06

L 3x3x3/8x 2'-0"

BILL OF MATERIAL

NO PCS	MATERIAL	LG FT	LG IN	MK	REMARK	TOTAL WT BLACK
1	L 3x3x3/8	2	0	06	SHIP LOOSE	14.4
					SUBTOTAL	14.4
					3 1/2% GALV.	0.5
TOTAL WEIGHT PER UNIT						14.9

4 REQUIRED
TOTAL WEIGHT = 59.6

NOTES:

1. ALL ANGLE - ASTM A36
2. GALV. AFTER FABRICATION PER ASTM A123

GALVANIZERS, INC.
RELEASED FOR CONSTRUCTION

DATE	SYM	REVISION RECORD	AUTH.	DR.	CK.

BLACK HILLS POWER INC.
WEST RAPID CITY SUBSTATION
P.O. NO: 5010015188
RAPID CITY, SD
SPEC. NO.: SANDMAN STRUCTURAL ENG.
REF. DWG.: 16-CW-06

GALVANIZERS, INC.

BLACK HILLS POWER

DRAWN BY	CHECKED BY
SLK	SLK
FILE NAME RCSD06	CHECK DATE: 1/2/19

TITLE
BUILDING PLATFORM MOUNTING BRACKETS

DATE 1/2/19

DRAWING NUMBER 19-RCSD-06

P:\04233\00\DWG\RECORD\WRCC\CAD\WRC-C-402B.DWG

DGR ENGINEERING
ROCK RAPIDS, IOWA
(712) 472-2531

DATE	DRAWN BY	NO.	APPROVED BY	REVISION DESCRIPTION
06-20	KLV	1	PDK	CONFORMING TO CONSTRUCTION RECORDS
10-19	SMW	0	PDK	FOR CONSTRUCTION

BLACK HILLS ENERGY

WEST RAPID SUBSTATION

STEEL DETAILS
BUILDING PLATFORM

DRAWN BY SMW DATE 10-19
APPROVED BY PDK DATE 10-19
DWG NO. WRC-C-402B REVISION NO 1

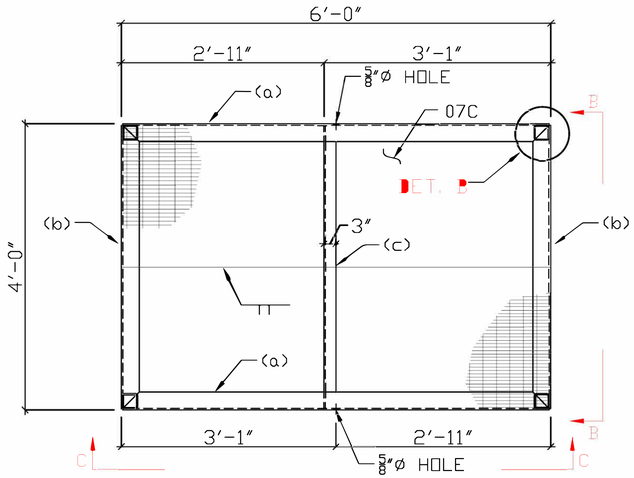

PLAN

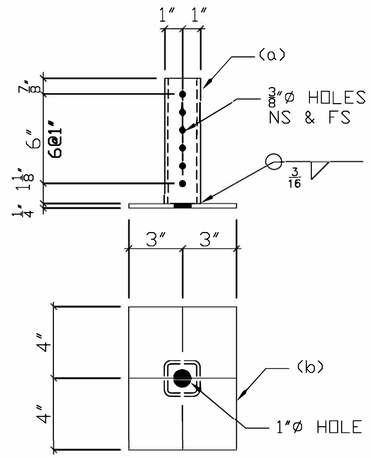

WELDMENT 07B

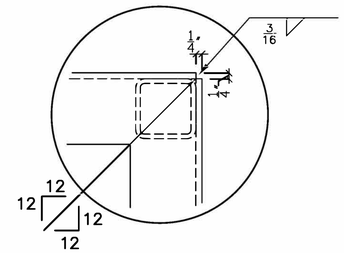

DETAIL B
TYP.

37 REQUIRED
TOTAL WEIGHT = 15,643.6

BILL OF MATERIAL

NO PCS	MATERIAL	LG FT	LG IN	MK	REMARK	TOTAL WT BLACK
1	WELDMENT			07A		
1	L 3x3x1/4	5	11 1/2	07A		29.2
1	L 3x3x1/4	5	11 1/2	A07A		29.2
2	L 3x3x1/4	3	11 1/2	B07A		38.8
1	L 3x3x1/4	3	11 1/2	C07A		19.4
4	HSS 2.5x2.5x3/16	0	5 5/8	D07A		10.8
4	WELDMENTS			07B		
4	HSS 2x2x3/16	0	8	07B		11.6
4	PL 1/4x6	0	8	B07B		13.6
1	WELDMENT			07C		
1	GR 1 1/2x3/16x24	6	0	07C	SERRATED	127.2
1	GR 1 1/2x3/16x24	6	0	A07C	SERRATED	127.2
	HARDWARE (+5%)					
9	GR CLIPS					0.8
9	SCR 1/4	0	3		STAINLESS STEEL	0.1
5	MB 5/16	0	3			0.5
5	HN 5/16				HEX NUT	0.1
					SUBTOTAL	408.5
14.3					3 1/2% GALV	14.5
TOTAL WEIGHT PER UNIT						422.8

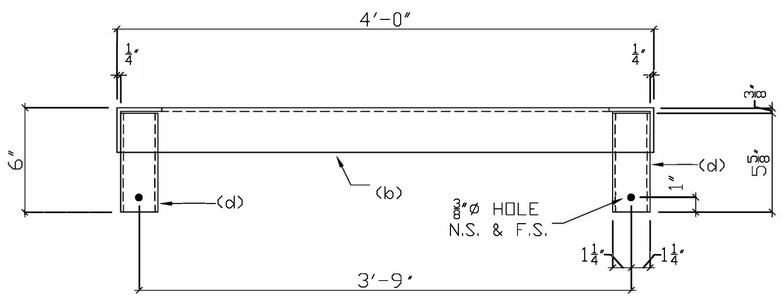

SECTION B-B
WELDMENT 07A

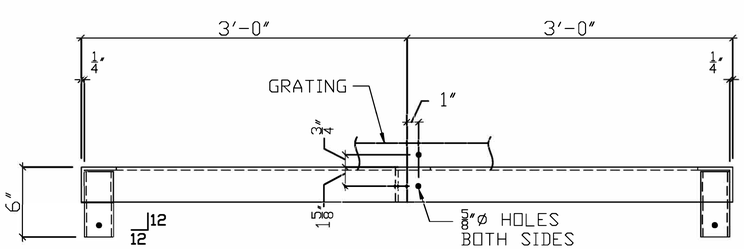

SECTION C-C

NOTES:

1. ALL ANGLE - ASTM A36
2. GALV. AFTER FABRICATION PER ASTM A123
3. SERRATED GRATING - 1 1/2" x 3/16" BARS 1 3/16" C TO C

GALVANIZERS, INC.
RELEASED FOR CONSTRUCTION

DATE	SYM	REVISION RECORD	AUTH.	DR.	CK.

BLACK HILLS POWER INC.
WEST RAPID CITY SUBSTATION
P.O. NO: 5010015188
RAPID CITY, SD
SPEC. NO.: SANDMAN STRUCTURAL ENG.
REF. DWG.: 16-CW-07 & 08

GALVANIZERS, INC.

BLACK HILLS POWER

DRAWN BY	CHECKED BY
SLK	SLK
FILE NAME RCSD07	CHECK DATE: 1/2/19

TITLE: OPERATOR PLATFORM

DATE: 1/2/19

DRAWING NUMBER: 19-RCSD-07

P:\04233\00\DWG\RECORD\WRC\CAD\WRC-C-403.DWG

DGR ENGINEERING
ROCK RAPIDS, IOWA
(712) 472-2531

DATE	DRAWN BY	NO.	APPROVED BY	REVISION DESCRIPTION
06-20	KLV	1	PDK	CONFORMING TO CONSTRUCTION RECORDS
10-19	SMW	0	PDK	FOR CONSTR UC ON

BLACK HILLS ENERGY
WEST RAPID SUBSTATION
STEEL DETAILS
OPERATOR PLATFORM

DRAWN BY SMW DATE 10-19
APPROVED BY PDK DATE 10-19
DWG NO. WRC-C-403
REVISION 1

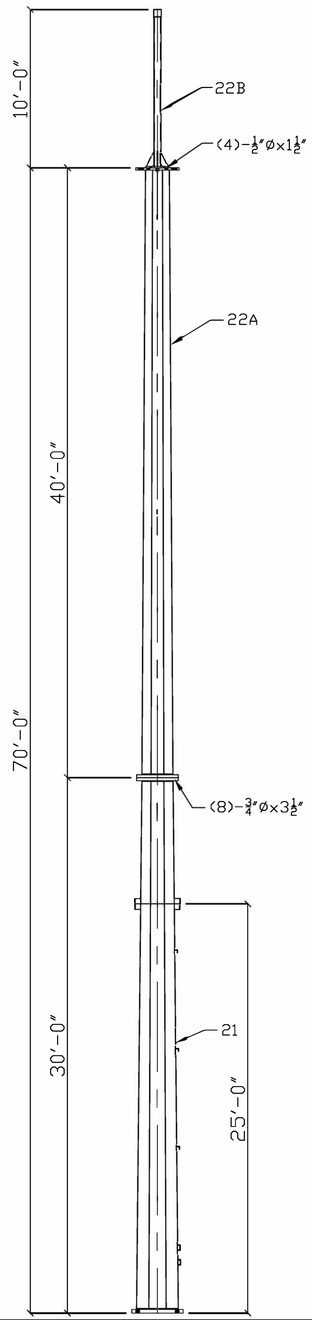

BILL OF MATERIAL

NO PCS	MATERIAL	LG FT	LG IN	MK	REMARK	TOTAL WT BLACK
1	WELDMENT			21		
1	PL 1/4x 29 1/2x42 1/4	29	9 1/4	21	BT & TPRD GR 50	907.9
1	PL 1/4x 29 1/2x42 1/4	29	9 1/4	A21	BT & TPRD GR 50	907.9
1	PL 1 1/4x29 3/4	2	5 3/4	B21		314.1
1	PL 1x20 3/8	1	8 3/8	C21		117.7
2	PL 3/8x8	1	3 1/4	D21	BENT	26.0
1	C 4x5.4	0	10	F21		4.5
1	C 4x5.4	0	10	G21		4.5
5	FB 3/8x3	0	4	K21		6.5
3	L 2x2x3/16	0	4 1/2	M21		3.0
1	FB 3/16x1 1/2	11	11 1/2	BB21	BACKER BAR	11.5
1	WELDMENT			22A		
1	PL 1/4x 16 3/4x29 1/2	29	10	22A	BT & TPRD GR 50	586.5
1	PL 1/4x 16 3/4x29 1/2	29	10	A22A	BT & TPRD GR 50	586.5
2	PL 1/4x 12 1/2x16 3/4	10	0	AA22A	BT & TPRD GR 50	248.8
1	PL 1/2x16 1/2	1	4 1/2	B22A		38.6
1	PL 1x20 3/8	1	8 3/8	C22A		117.7
8	FB 3/8x3	0	4	K22A		10.4
1	FB 3/16x1 1/2	7	8 1/2	BB22A	BACKER BAR	7.4

BILL OF MATERIAL

NO PCS	MATERIAL	LG FT	LG IN	MK	REMARK	TOTAL WT BLACK
1	WELDMENT			22B		
1	PI 2 SCH 40	9	11 1/2	22B	W/ CAP	36.4
1	PL 1/2x8	0	8	B22B		9.0
4	PL 1/4x2 3/4	0	5	C22B		1.8
	HARDWARE (+5%)					
9	MB 3/4	0	3 1/2		A325 BOLTS	7.8
9	HHN 3/4 NC				HVY HEX NUTS	
18	FW 3/4				HARDENED	
9	LW 3/4				LOCKWASHERS	0.4
5	MB 1/2	0	1 1/2		A325 BOLTS	1.1
5	HHN 1/2 NC				HVY HEX NUTS	
5	FW 1/2				HARDENED	
5	LW 1/2				LOCKWASHERS	0.1
					SUBTOTAL	3956.1
					3 1/2% GALV.	138.5
					TOTAL WEIGHT PER UNIT	4094.6

2 REQUIRED
TOTAL WEIGHT = 8,189.2

NOTES:

1. ALL TUBE - ASTM A500, GR. B
2. ALL W-SHAPES - ASTM A992 GR 50
3. ALL PL 1/2" & THICKER - GR 50 UNO
   ALL OTHER PL & SHAPES - A36 UNO
4. ALL HOLES AS NOTED
5. GALV. AFTER FABRICATION PER ASTM A123.
6. START & STOP WELDS @ ℄ OF TUBES & OCTAGONS.
7. FOR DETAIL DRAWINGS SEE SHEETS 21-22
8. FULL PENETRATION SEAM WELD 6" FROM ALL JOINTS (INCLUDING BASE PL, FLANGE PL & SPLICES)

GALVANIZERS, INC.
RELEASED FOR CONSTRUCTION

DATE	SYM	REVISION RECORD	AUTH.	DR.	CK.

BLACK HILLS POWER INC.
WEST RAPID CITY SUBSTATION
P.O. NO: 5010015188
RAPID CITY, SD
SPEC. NO.: SANDMAN STRUCTURAL ENG.
REF. DWG.: 11-HSSD-20

GALVANIZERS, INC.

BLACK HILLS POWER

DRAWN BY	CHECKED BY
SLK	SLK
FILE NAME: RCSD20	CHECK DATE: 1/2/19

TITLE: LIGHTNING MAST - LM70

DATE: 1/2/19

DRAWING NUMBER: 19-RCSD-20

P:\04233\00\DWG\RECORD\WRC\CAD\WRC-C-404A.DWG

DGR ENGINEERING
ROCK RAPIDS, IOWA
(712) 472-2531

DATE	DRAWN BY	NO.	APPROVED BY	REVISION DESCRIPTION
06-20	KLV	1	PDK	CONFORMING TO CONSTRUCTION RECORDS
10-19	SMW	0	PDK	FOR CONSTRUCTION

BLACK HILLS ENERGY
WEST RAPID SUBSTATION
STEEL DETAILS
LIGHTNING MAST LM70

DRAWN BY SMW DATE 10-19
APPROVED BY PDK DATE 10-19
DWG NO. WRC-C-404A REVISION 1

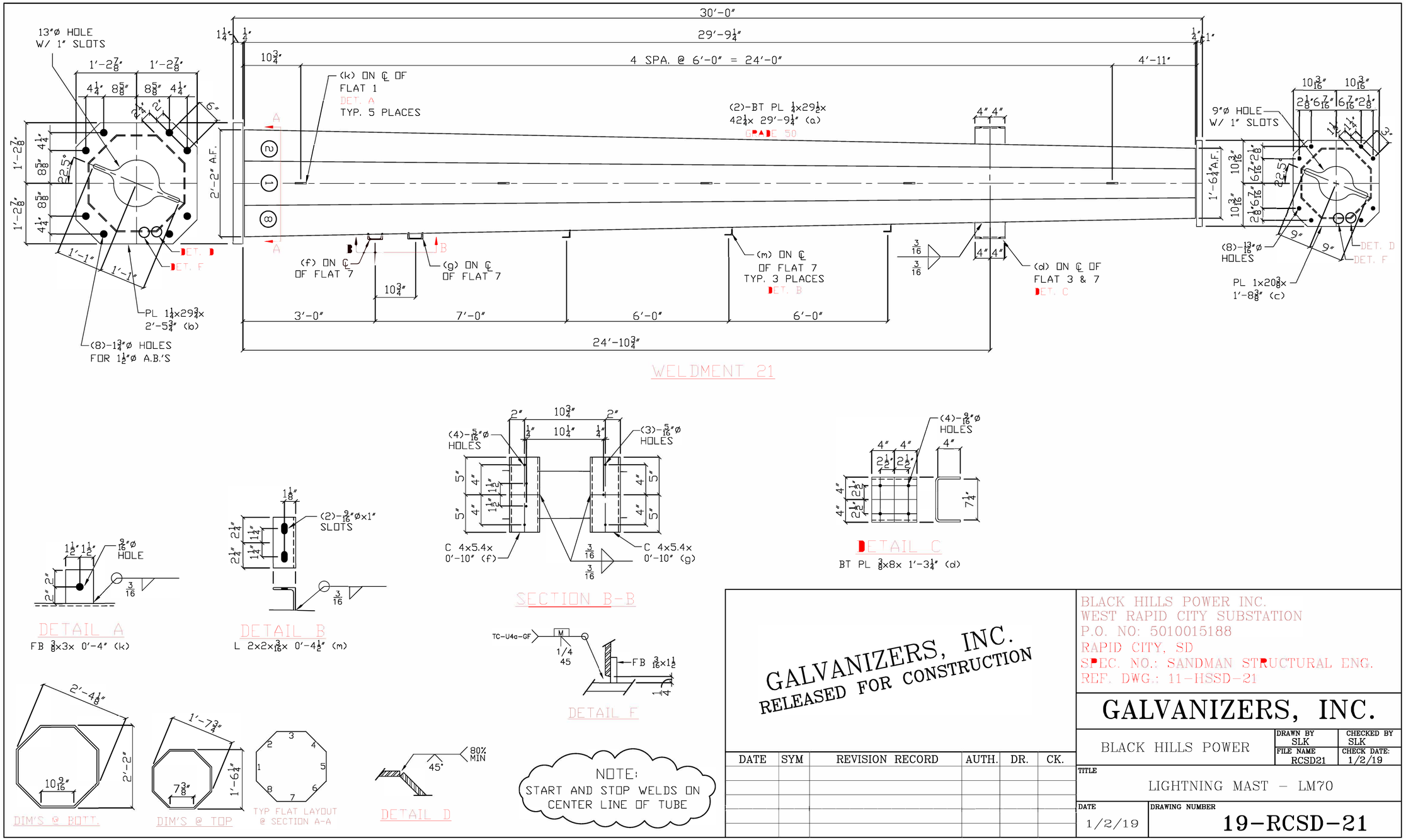

NOTE:
START AND STOP WELDS ON CENTER LINE OF TUBE

GALVANIZERS, INC.
RELEASED FOR CONSTRUCTION

DATE	SYM	REVISION RECORD	AUTH.	DR.	CK.

BLACK HILLS POWER INC.
WEST RAPID CITY SUBSTATION
P.O. NO: 5010015188
RAPID CITY, SD
SPEC. NO.: SANDMAN STRUCTURAL ENG.
REF. DWG.: 11-HSSD-21

GALVANIZERS, INC.

BLACK HILLS POWER

DRAWN BY	CHECKED BY
SLK	SLK
FILE NAME RCSD21	CHECK DATE: 1/2/19

TITLE: LIGHTNING MAST – LM70

DATE: 1/2/19

DRAWING NUMBER: 19-RCSD-21

DATE	DRAWN BY	NO.	APPROVED BY	REVISION DESCRIPTION
06-20	KLV	1	PDK	CONFORMING TO CONSTRUCTION RECORDS
10-19	SMW	0	PDK	FOR CONSTRUCTION

BLACK HILLS ENERGY

WEST RAPID SUBSTATION

STEEL DETAILS
LIGHTNING MAST LM70

DRAWN BY SMW DATE 0-19
APPROVED BY PDK DATE 10-19
DWG NO. WRC-C-404B REVISION 1

DGR ENGINEERING
ROCK RAPIDS, IOWA
(712) 472-2531

P:\04023\00\DWG\RECORD\WRC\CAD\WRC-C-404B.DWG

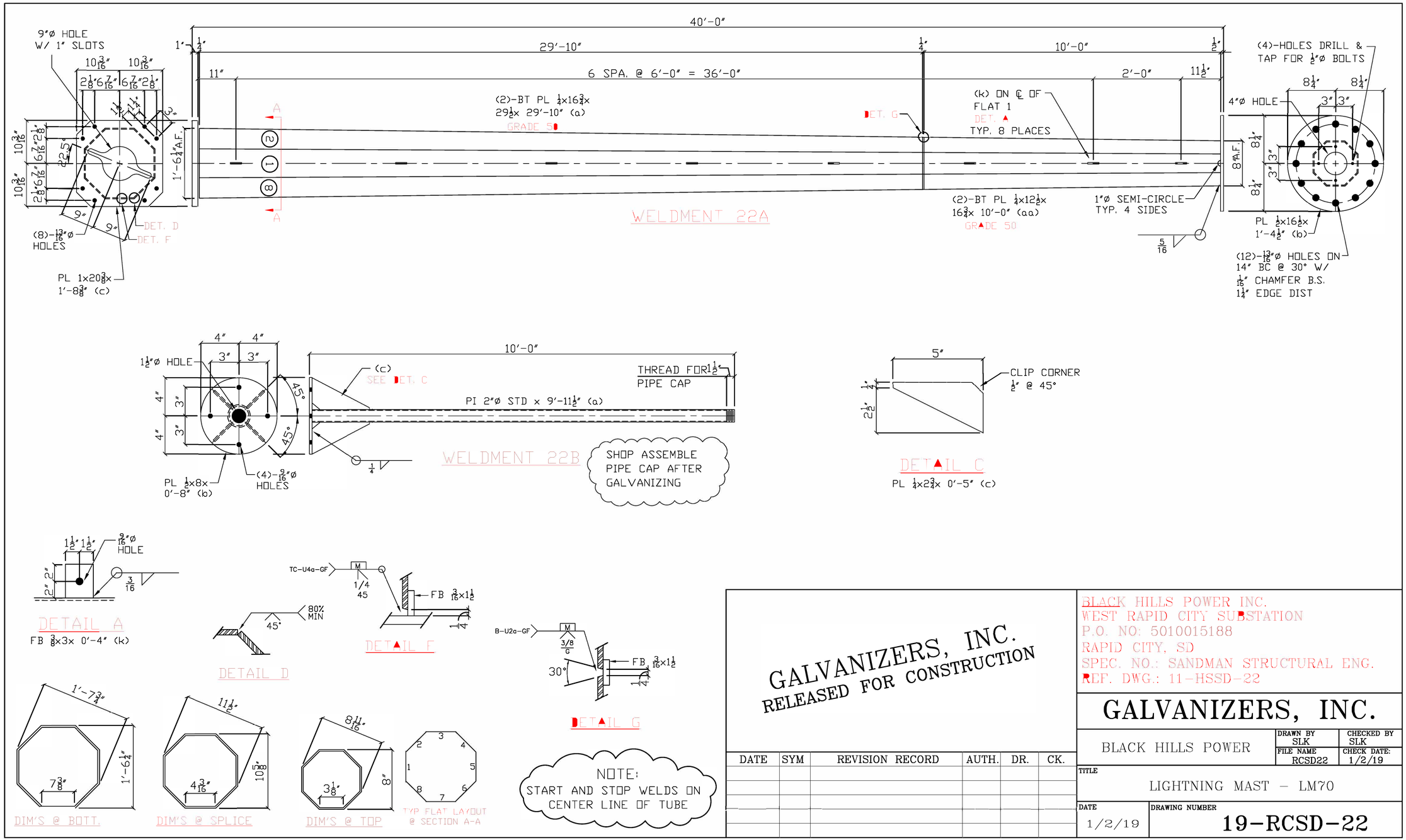

GALVANIZERS, INC.
RELEASED FOR CONSTRUCTION

DATE	SYM	REVISION RECORD	AUTH.	DR.	CK.

BLACK HILLS POWER INC.
WEST RAPID CITY SUBSTATION
P.O. NO: 5010015188
RAPID CITY, SD
SPEC. NO.: SANDMAN STRUCTURAL ENG.
REF. DWG.: 11-HSSD-22

GALVANIZERS, INC.

BLACK HILLS POWER

DRAWN BY	CHECKED BY
SLK	SLK
FILE NAME RCSD22	CHECK DATE: 1/2/19

TITLE: LIGHTNING MAST – LM70

DATE: 1/2/19

DRAWING NUMBER: 19-RCSD-22

P:\04223\00\DWG\RECORD\WRC\CAD\WRC-C-404C.DWG

DGR ENGINEERING
ROCK RAPIDS, IOWA
(712) 472-2531

DATE	DRAWN BY	NO.	APPROVED BY	REVISION DESCRIPTION
06-20	KLV	1	PDK	CONFORMING TO CONSTRUCTION RECORDS
10-19	SMW	0	PDK	FOR CONSTRUCTION

BLACK HILLS ENERGY
WEST RAPID SUBSTATION
STEEL DETAILS
LIGHTNING MAST LM70

DRAWN BY SMW DATE 10-19
APPROVED BY PDK DATE 10-19
DWG NO. WRC-C-404C REVISION 1

DATE	SYM	REVISION RECORD	AUTH.	DR.	CK.

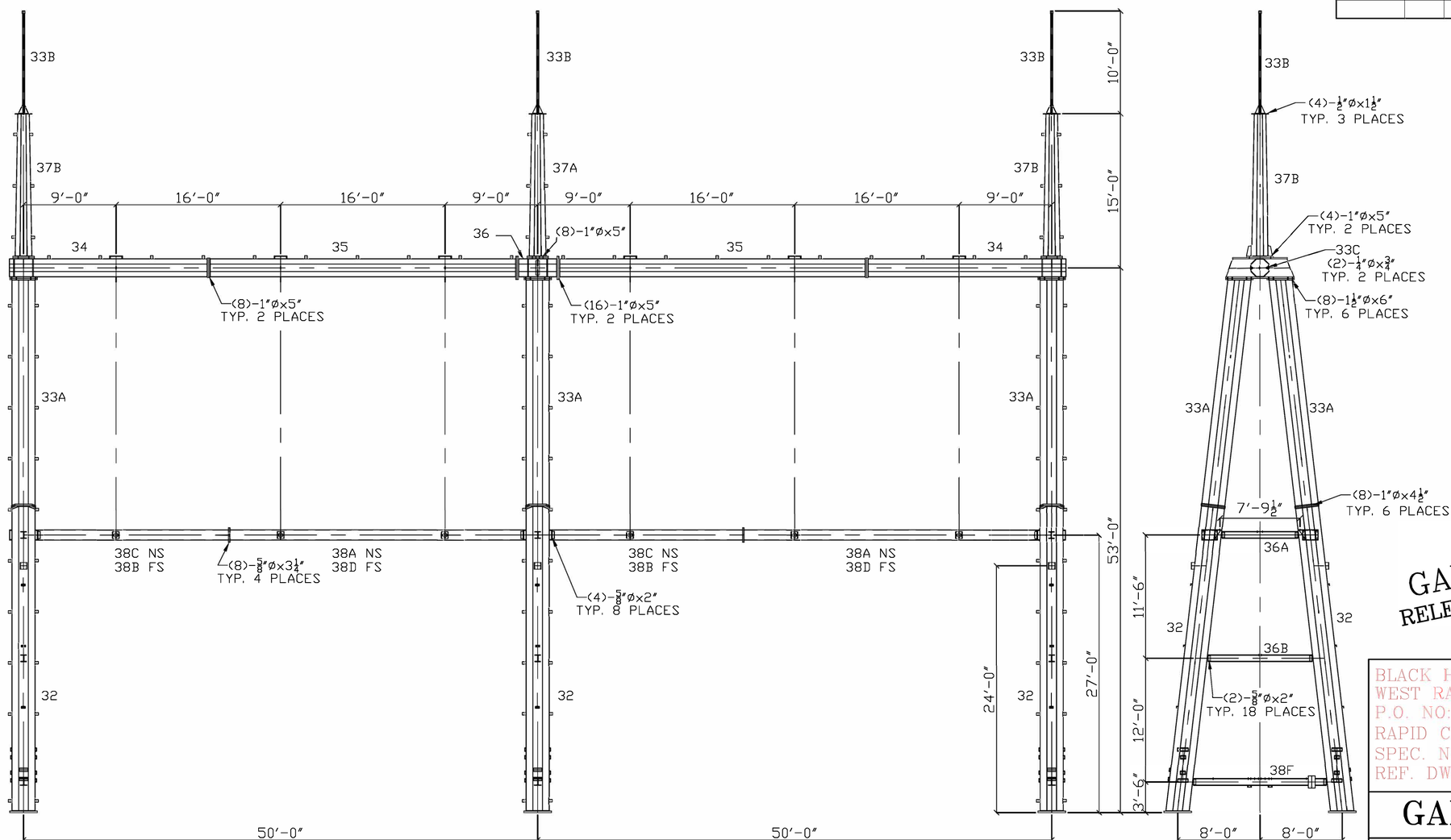

GALVANIZERS, INC.
RELEASED FOR CONSTRUCTION

BLACK HILLS POWER INC.
WEST RAPID CITY SUBSTATION
P.O. NO: 5010015188
RAPID CITY, SD
SPEC. NO.: SANDMAN STRUCTURAL ENG.
REF. DWG.: 11-HSSD-30

GALVANIZERS, INC.

BLACK HILLS POWER	DRAWN BY SLK	CHECKED BY SLK
	FILE NAME RCSD30	CHECK DATE: 1/2/19

TITLE: 230kV A-FRAME – HAF

DATE: 1/2/19

DRAWING NUMBER: 19-RCSD-30

STRUCTURE DESIGN LOADINGS (FULL TENSION WITH ANGLE) FOR 1272kcm 45/7 ACSR "BITTERN", 3/8" HS STATIC, AND 48F OPGW.
NESC HEAVY ½" ICE 4PSF WIND, 0°F, OLF = 1.5, 2.5, 1.65 (VERT., WIND, TENSION)
EXTREME WIND 20PSF, 60° F, OLF = 1.15(ALL LOADS)
WIND SPAN = 400FT
WEIGHT SPAN = 400FT
TAKEOFF ANGLE = 15 DEGREES (HORIZONTAL)
= 25 DEGREES (VERICAL)
DESIGN TENSION FOR 400FT RULING SPAN UNDER NESC HEAVY (WITHOUT OLFs):
1272 ACSR = 7500 LBS
⅜ HS STATIC = 3000 LBS
48F OPGW = 3000 LBS

DATE	DRAWN BY	NO.	APPROVED BY	REVISION DESCRIPTION
06-20	KLV	1	PDK	CONFORMING TO CONSTRUCTION RECORDS
10-19	SMW	0	PDK	FOR CONSTRUCTION

BLACK HILLS ENERGY
WEST RAPID SUBSTATION
STEEL DETAILS
230 KV A-FRAME HAF

DRAWN BY SMW DATE 10-19
APPROVED BY PDK DATE 10-19
DWG NO. WRC-C-405A REVISION NO. 1

DGR ENGINEERING
ROCK RAPIDS, IOWA
(712) 472-2531

P:\042330\DWG\RECORD\WRC\CAD\WRC-C-405A.DWG

BILL OF MATERIAL

NO PCS	MATERIAL	LG FT	LG IN	MK	REMARK	TOTAL WT BLACK
6	WELDMENTS			32		
6	PL 5/16x43 3/4	29	10	32	BENT GR 50	8353.8
6	PL 5/16x43 3/4	29	10	A32	BENT GR 50	8353.8
6	PL 2x32 1/4	2	8 1/4	B32		3540.6
6	PL 1 1/4x28 1/4	2	4 1/4	C32		1699.2
6	PL 3/8x8	1	3 1/4	D32	BENT	78.0
12	C 12x20.7	1	6	F32		373.2
24	C 4x5.4	1	0	G32		129.6
24	C 4x5.4	0	6	H32		64.8
6	C 4x5.4	0	10	J32		27.0
72	FB 3/8x3	0	4	K32		93.6
18	L 2x2x3/16	0	4 1/2	M32		18.0
6	C 4x5.4	0	10	P32		27.0
18	PL 1/2x4 5/16	0	6	S32		66.6
6	FB 3/16x1 1/2	14	7	BB32	BACKER BAR	84.0
6	WELDMENTS			33A		
6	PL 5/16x43 3/4	22	1 13/16	33A	BENT GR 50	6202.8
6	PL 5/16x43 3/4	22	1 13/16	A33A	BENT GR 50	6202.8
6	PL 1 3/4x32	2	8	B33A		3051.0
6	PL 1 1/4x28 1/4	2	4 1/4	C33A		1699.2
48	FB 3/8x3	0	4	K33A		62.4
6	FB 3/16x1 1/2	14	7	BB33A	BACKER BAR	84.0
3	WELDMENTS			33B		
3	PI 2 SCH 40	9	11 1/2	33B	W/ CAP	109.2
3	PL 1/2x12	1	0	B33B		61.2
12	PL 1/4x4 1/2	0	10	C33B		38.4
2	PL 10GAx21	1	9	33C	SHIP LOOSE	34.8
2	WELDMENTS			34		
2	PL 5/16x33 3/4	19	2 3/4	34	BENT GR 50	1384.6
2	PL 5/16x33 3/4	19	2 3/4	A34	BENT GR 50	1384.6
2	PL 1 3/4x32	6	8	B34		2542.4
2	PL 1 1/2x25	5	4	C34		1362.4
2	PL 1 1/2x23	1	11	D34		450.4
8	PL 1x21	2	10 1/8	F34	CUT TO FIT	1624.8
4	PL 1/2x9 5/8	0	11 1/8	G34	CUT TO FIT	60.8
2	C 15x33.9	1	2	H34		79.2
2	FB 3/4x3	2	6	J34		38.4
2	FB 3/4x3	0	4 1/2	K34		5.8
8	FB 3/8x3	0	4	M34		10.4
4	FB 3/16x2	0	2	P34		1.2
2	FB 3/16x1 1/2	5	7 1/2	BB34	BACKER BAR	10.8
2	WELDMENTS			35		
2	PL 5/16x33 3/4	29	8 1/2	35	BENT GR 50	2139.0
2	PL 5/16x33 3/4	29	8 1/2	A35	BENT GR 50	2139.0
2	PL 1 1/2x23	1	11	B35		450.4
2	PL 1 1/2x27 1/4	2	3 1/4	D35		632.2
4	C 15x33.9	1	2	H35		158.4

BILL OF MATERIAL

NO PCS	MATERIAL	LG FT	LG IN	MK	REMARK	TOTAL WT BLACK
4	FB 3/4x3	2	6	J35		76.8
4	FB 3/4x3	0	4 1/2	K35		11.6
12	FB 3/8x3	0	4	M35		15.6
2	FB 3/16x1 1/2	11	3	BB35	BACKER BAR	21.6
1	WELDMENT			36		
1	PL 5/16x33 3/4	3	8 1/2	36	BENT GR 50	133.5
1	PL 5/16x33 3/4	3	8 1/2	A36	BENT GR 50	133.5
1	PL 1 3/4x32	6	8	B36		1271.2
1	PL 1 1/2x25	5	4	C36		681.2
2	PL 1 1/2x27 1/4	2	3 1/4	D36		632.2
4	PL 1x21	2	10 1/8	F36	CUT TO FIT	812.4
2	PL 3/4x9 5/8	1	9	G36	CUT TO FIT	86.0
2	PL 3/8x4	1	5	H36		14.6
1	FB 3/16x1 1/2	11	3	BB36	BACKER BAR	10.8
3	W 8x24	7	4 1/8	36A	SHIP LOOSE	528.9
3	W 8x24	10	0	36B	SHIP LOOSE	720.0
1	WELDMENT			37A		
1	PL 1/4x 21 1/2x31 1/2	13	9 3/4	37A	BT & TPRD	311.2
1	PL 1/4x 21 1/2x31 1/2	13	9 3/4	A37A	BT & TPRD	311.2
1	PL 1 1/2x25	2	7	B37A		330.0
1	PL 1/2x20	1	8	C37A		56.7
4	PL 1/2x5 1/4	1	0	D37A		36.0
6	FB 3/8x3	0	4	K37A		7.8
1	FB 3/16x1 1/2	5	3	BB37A	BACKER BAR	5.1
2	WELDMENTS			37B		
2	PL 1/4x 21 1/2x31 1/2	13	9 3/4	37B	BT & TPRD	622.4
2	PL 1/4x 21 1/2x31 1/2	13	9 3/4	A37B	BT & TPRD	622.4
2	PL 1 1/2x25	2	7	B37B		660.0
2	PL 1/2x20	1	8	C37B		113.4
8	PL 1/2x5 1/4	1	0	D37B		72.0
12	FB 3/8x3	0	4	K37B		15.6
2	FB 3/16x1 1/2	5	3	BB37B	BACKER BAR	10.2

BILL OF MATERIAL

NO PCS	MATERIAL	LG FT	LG IN	MK	REMARK	TOTAL WT BLACK
2	WELDMENTS			38A		
2	HSS 12x12x1/4	28	6	38A		2247.6
2	PL 1x17	1	5	B38A		163.8
4	PL 1/2x7 3/8	1	3	C38A		62.8
4	PL 1/2x7	0	10	D38A		40.0
4	L 3x3x5/16	0	8 1/2	F38A		17.6
4	PL 1/2x8	1	1	G38A	BENT	59.2
2	WELDMENTS			38B		
2	HSS 12x12x1/4	28	6	38B		2247.6
2	PL 1x17	1	5	B38B		163.8
4	PL 1/2x7 3/8	1	3	C38B		62.8
4	PL 1/2x7	0	10	D38B		40.0
4	L 3x3x5/16	0	8 1/2	F38B		17.6
2	WELDMENTS			38C		
2	HSS 12x12x1/4	18	6	38C		1459.0
2	PL 1x17	1	5	B38C		163.8
2	PL 1/2x7 3/8	1	3	C38C		31.4
2	PL 1/2x7	0	10	D38C		20.0
4	L 3x3x5/16	0	8 1/2	F38C		17.6
2	PL 1/2x8	1	1	G38C	BENT	29.6
2	WELDMENTS			38D		
2	HSS 12x12x1/4	18	6	38D		1459.0
2	PL 1x17	1	5	B38D		163.8
2	PL 1/2x7 3/8	1	3	C38D		31.4
2	PL 1/2x7	0	10	D38D		20.0
4	L 3x3x5/16	0	8 1/2	F38D		17.6
3	WELDMENTS			38F		
3	W 8x31	12	9 5/8	38F		1190.7
3	PL 3/8x8	1	2	B38F		35.7
6	L 2x2x3/16	0	4 1/2	M38F		6.0

BILL OF MATERIAL

NO PCS	MATERIAL	LG FT	LG IN	MK	REMARK	TOTAL WT BLACK
	HARDWARE (+5%)					
51	MB 1 1/2	0	6		A325 BOLTS	295.8
51	HHN 1 1/2 NC				HVY HEX NUTS	
102	FW 1 1/2				HARDENED	
51	LW 1 1/2				LOCKWASHERS	14.3
51	MB 1	0	4 1/2		A325 BOLTS	97.8
69	MB 1	0	5		A325 BOLTS	139.8
120	HHN 1 NC				HVY HEX NUTS	
240	FW 1				HARDENED	
120	LW 1				LOCKWASHERS	9.9
72	MB 5/8	0	2		A325 BOLTS	32.1
34	MB 5/8	0	3 1/4		A325 BOLTS	18.8
106	HHN 5/8 NC				HVY HEX NUTS	
212	FW 5/8				HARDENED	
106	LW 5/8				LOCKWASHERS	2.6
13	MB 1/2	0	1 1/2		A325 BOLTS	2.7
13	FW 1				HARDENED	
13	LW 1/2				LOCKWASHERS	0.1
5	SCR 1/4	0	0 3/4		SELF-TAPPING	---
					SUBTOTAL	73754.8
					3 1/2% GALV.	2581.4
					TOTAL WEIGHT PER UNIT	76336.2

ONE REQUIRED
TOTAL WEIGHT = 76,336.2

NOTES:

1. FOR ERECTION DRAWING SEE SHEET 30
2. FOR DETAIL DRAWINGS SEE SHEETS 32-38
3. ALL TUBE - ASTM A500, GR. B
4. ALL W-SHAPES - ASTM A992 GR 50
5. ALL PL 1/2" & THICKER - GR 50 UNO
6. ALL OTHER PL & SHAPES - A36
7. ALL HOLES AS NOTED
8. GALV. AFTER FABRICATION PER ASTM A123.
9. START & STOP WELDS @ ∟ C OF TUBES & OCTAGONS.
10. FULL PENETRATION SEAM WELD 6" FROM ALL JOINTS (INCLUDING BASE PL, FLANGE PL & SPLICES)

GALVANIZERS, INC.
RELEASED FOR CONSTRUCTION

DATE	SYM	REVISION RECORD	AUTH.	DR.	CK.

BLACK HILLS POWER INC.
WEST RAPID CITY SUBSTATION
P.O. NO: 5010015188
RAPID CITY, SD
SPEC. NO.: SANDMAN STRUCTURAL ENG.
REF. DWG.: 11-HSSD-31

GALVANIZERS, INC.

BLACK HILLS POWER

DRAWN BY SLK | CHECKED BY SLK
FILE NAME RCSD31 | CHECK DATE: 1/2/19

TITLE: 230kV A-FRAME - HAF

DATE 1/2/19 | DRAWING NUMBER 19-RCSD-31

P:\04233\00\DWG\RECORD\WRCC\ADWRC-C-405B.DWG

DGR ENGINEERING
ROCK RAPIDS, IOWA
(712) 472-2531

DATE	DRAWN BY	NO.	APPROVED BY	REVISION DESCRIPTION
06-20	KLV	1	PDK	CONFORMING TO CONSTRUCTION RECORDS
10-19	SMW	0	PDK	FOR CONSTRUCTION

BLACK HILLS ENERGY
WEST RAPID SUBSTATION
STEEL DETAILS
230 KV A-FRAME HAF

DRAWN BY SMW DATE 10-19
APPROVED BY PDK DATE 10-19
DWG NO. WRC-C-405B REVISION 1 OF

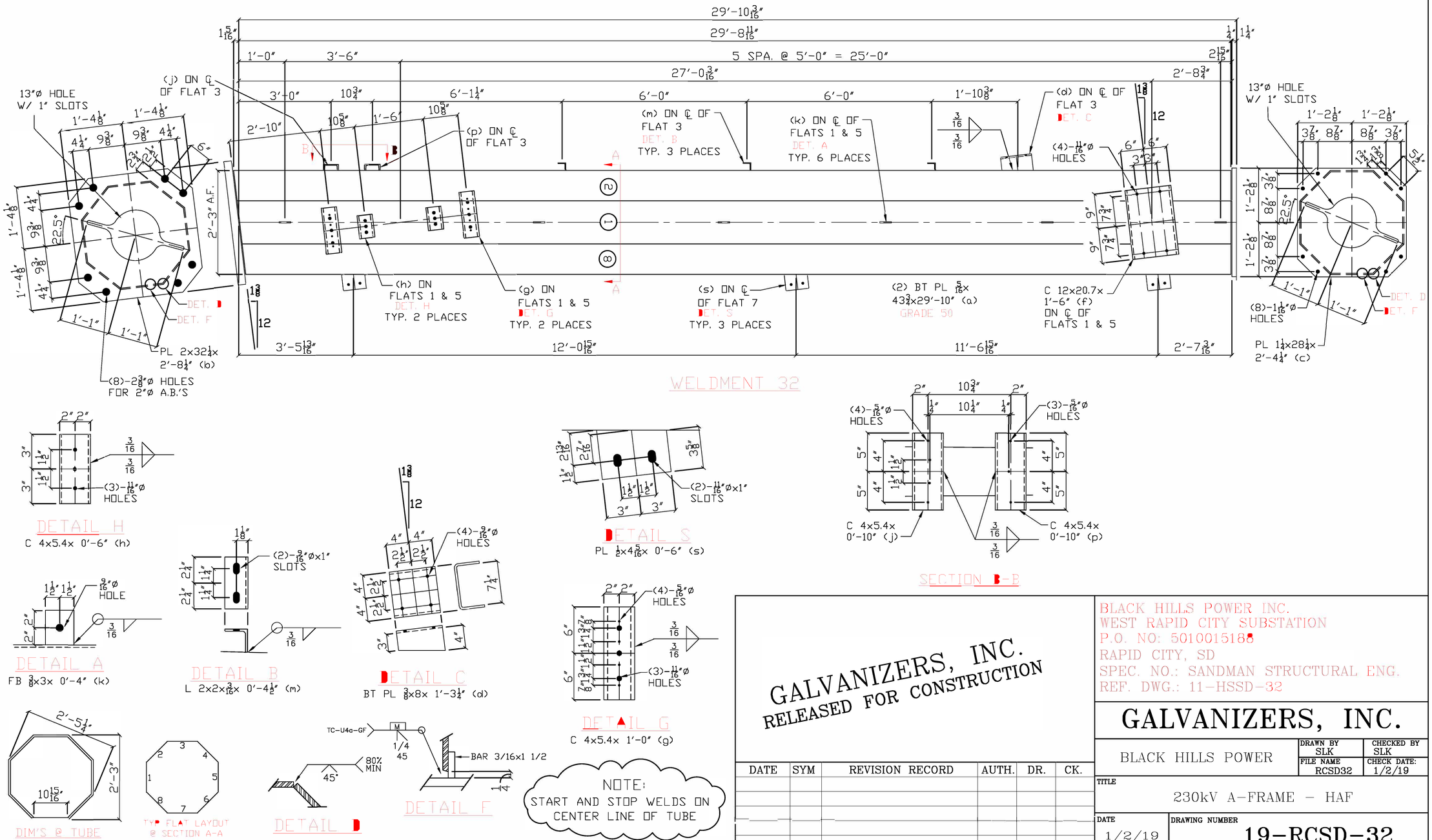

GALVANIZERS, INC.
RELEASED FOR CONSTRUCTION

DATE	SYM	REVISION RECORD	AUTH.	DR.	CK.

BLACK HILLS POWER INC.
WEST RAPID CITY SUBSTATION
P.O. NO: 5010015188
RAPID CITY, SD
SPEC. NO.: SANDMAN STRUCTURAL ENG.
REF. DWG.: 11-HSSD-32

GALVANIZERS, INC.

BLACK HILLS POWER

DRAWN BY	CHECKED BY
SLK	SLK
FILE NAME RCSD32	CHECK DATE: 1/2/19

TITLE: 230kV A-FRAME - HAF

DATE: 1/2/19

DRAWING NUMBER: 19-RCSD-32

P:\04\233\000\DWG\RECORD\WRC\CAD\WRC-C-405C.DWG

DATE	DRAWN BY	NO.	APPROVED BY	REVISION DESCRIPTION
06-20	KLV	1	PDK	CONFORMING TO CONSTRUCTION RECORDS
10-19	SMW	0	PDK	FOR CONSTRUCTION

BLACK HILLS ENERGY
WEST RAPID SUBSTATION
STEEL DETAILS
230 KV A-FRAME HAF

DRAWN BY SMW DATE 10-19
APPROVED BY PDK DATE 10-19
DWG NO. WRC-C-405C REVISION 1

DGR ENGINEERING
ROCK RAPIDS, IOWA
(712) 472-2531

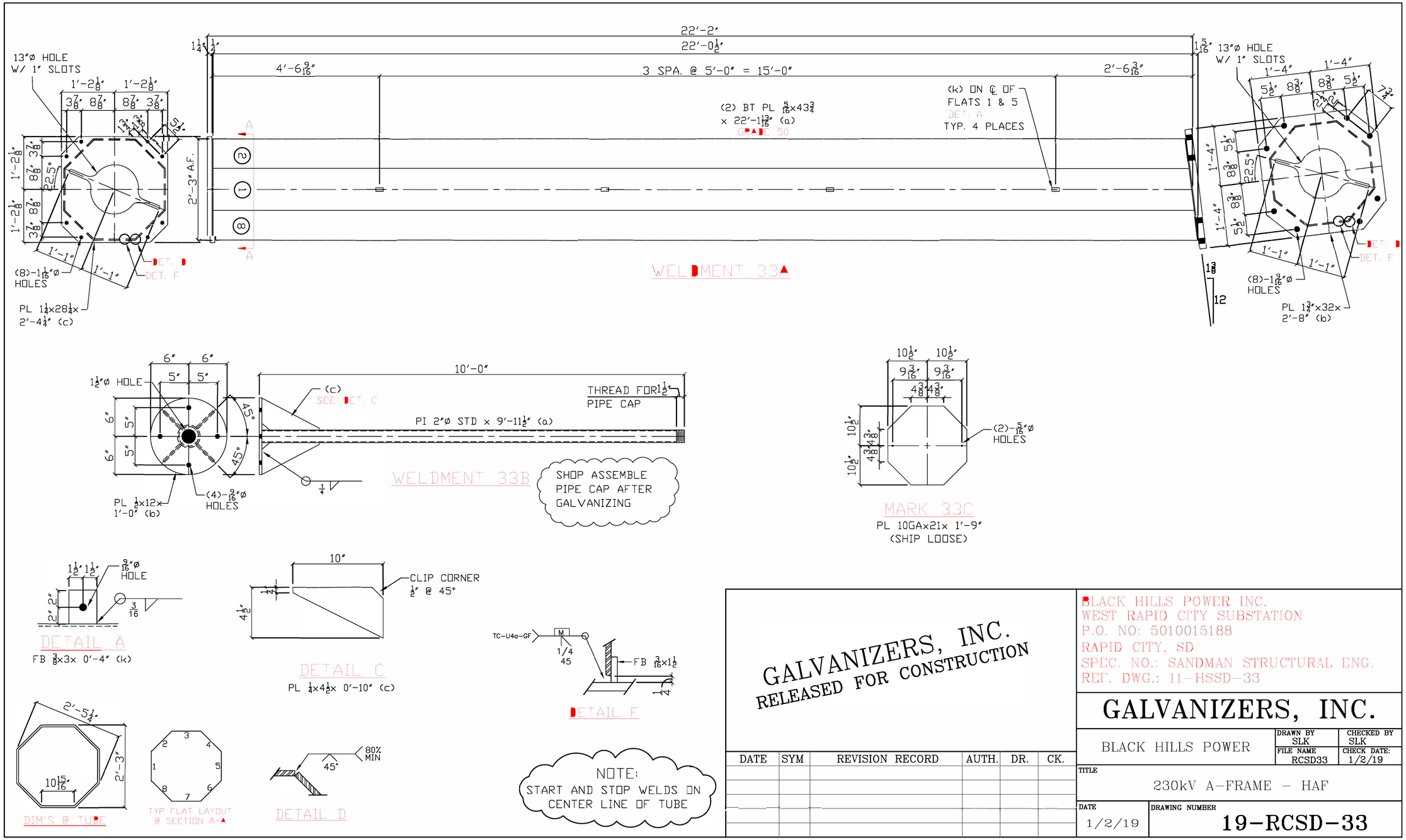

GALVANIZERS, INC.
RELEASED FOR CONSTRUCTION

DATE	SYM	REVISION RECORD	AUTH.	DR.	CK.

BLACK HILLS POWER INC.
WEST RAPID CITY SUBSTATION
P.O. NO: 5010015188
RAPID CITY, SD
SPEC. NO.: SANDMAN STRUCTURAL ENG.
REF. DWG.: 11-HSSD-33

GALVANIZERS, INC.

BLACK HILLS POWER

DRAWN BY	CHECKED BY
SLK	SLK
FILE NAME RCSD33	CHECK DATE: 1/2/19

TITLE: 230kV A-FRAME - HAF

DATE: 1/2/19

DRAWING NUMBER: 19-RCSD-33

P:\04233\00\DWG\RECORD\WRC\CAD\WRC-C-405D.DWG

DGR ENGINEERING
ROCK RAPIDS, IOWA
(712) 472-2531

DATE	DRAWN BY	NO.	APPROVED BY	REVISION DESCRIPTION
06-20	KLV	1	PDK	CONFORMING TO CONSTRUCTION RECORDS
10-19	SMW	0	PDK	FOR CONSTRUCTION

BLACK HILLS ENERGY

WEST RAPID SUBSTATION

STEEL DETAILS
230 KV A-FRAME HAF

DRAWN BY SMW DATE 10-19
APPROVED BY PDK DATE 10-19

DWG NO. WRC-C-405D SECTION 1 NO.

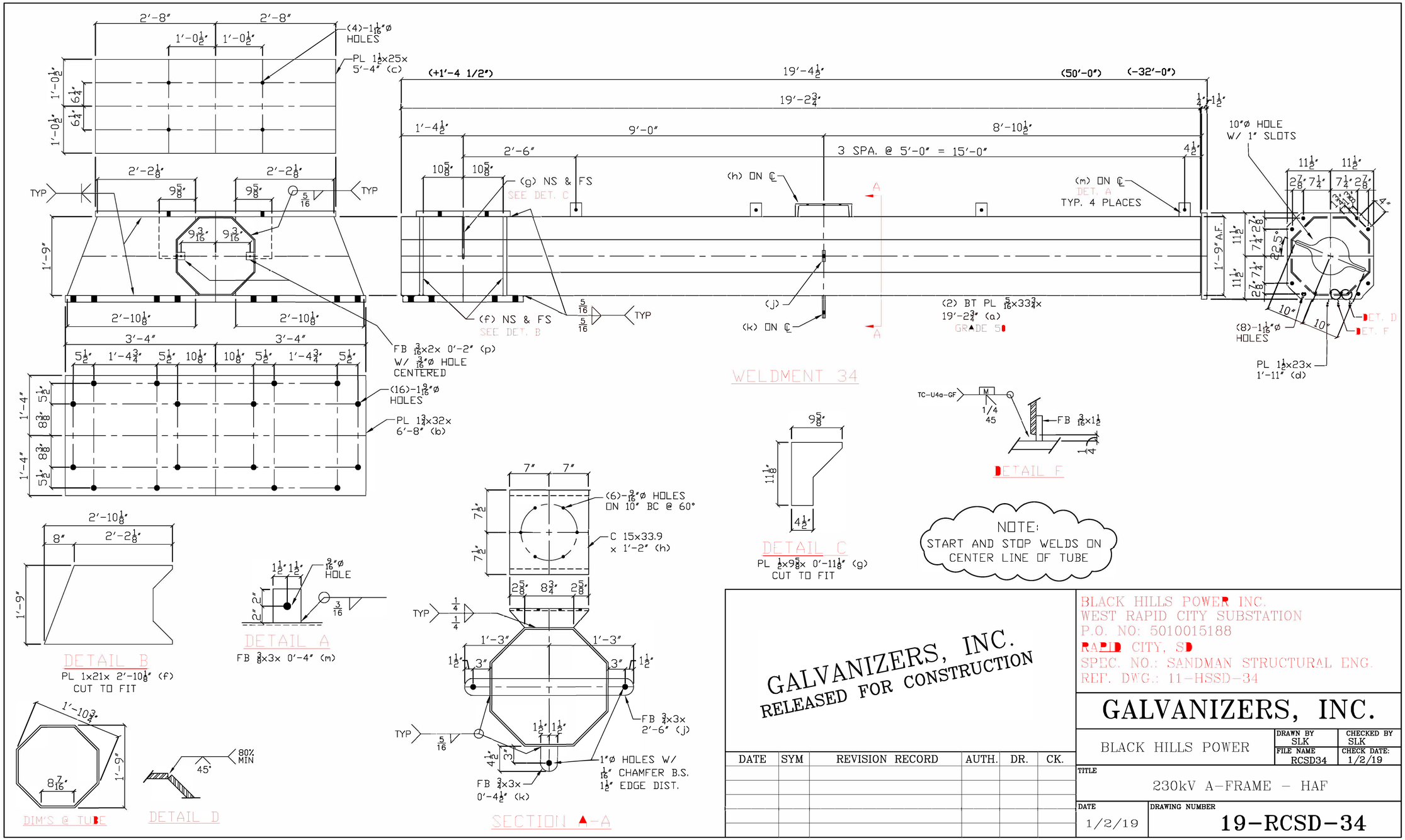

GALVANIZERS, INC.
RELEASED FOR CONSTRUCTION

DATE	SYM	REVISION RECORD	AUTH.	DR.	CK.

BLACK HILLS POWER INC.
WEST RAPID CITY SUBSTATION
P.O. NO: 5010015188
RAPID CITY, SD
SPEC. NO.: SANDMAN STRUCTURAL ENG.
REF. DWG.: 11-HSSD-34

GALVANIZERS, INC.

BLACK HILLS POWER

DRAWN BY	CHECKED BY
SLK	SLK
FILE NAME	CHECK DATE:
RCSD34	1/2/19

TITLE: 230kV A-FRAME - HAF

DATE: 1/2/19

DRAWING NUMBER: 19-RCSD-34

P:\04233\00\DWG\RECORD\WRC\CAD\WRC-C-405E.DWG

DGR ENGINEERING
ROCK RAPIDS, IOWA
(712) 472-2531

DATE	BY	NO.	APPROVED BY	REVISION DESCRIPTION
06-20	KLV	1	PDK	CONFORMING TO CONSTRUCTION RECORDS
10-19	SMW	0	PDK	FOR CONSTRUCTION

BLACK HILLS ENERGY
WEST RAPID SUBSTATION
STEEL DETAILS
230 KV A-FRAME HAF

DRAWN BY SMW DATE 10/9
APPROVED BY PDK DATE 10/9
DWG NO. WRC-C-405E REVISION 1

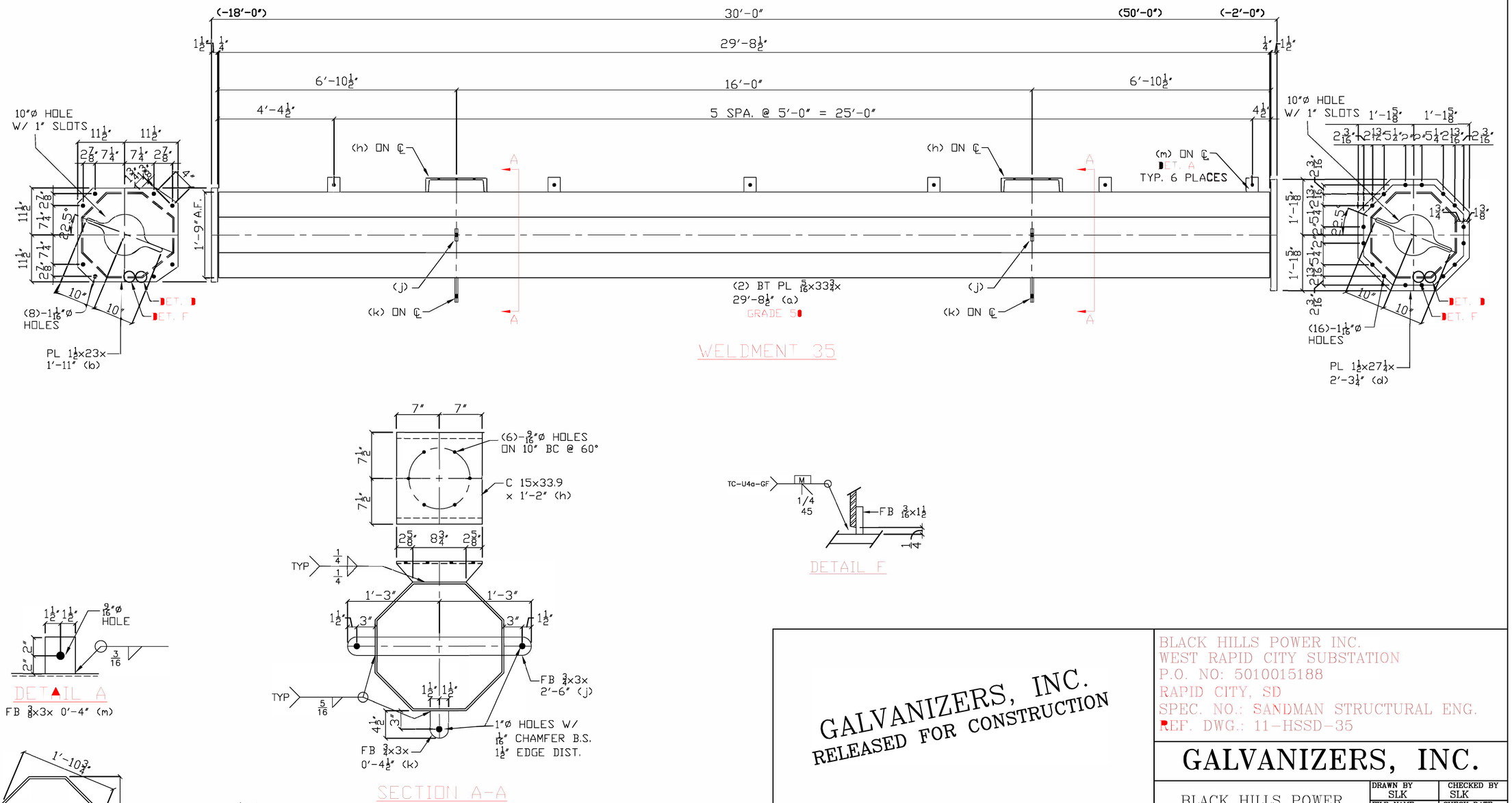

NOTE:
START AND STOP WELDS ON CENTER LINE OF TUBE

GALVANIZERS, INC.
RELEASED FOR CONSTRUCTION

DATE	SYM	REVISION RECORD	AUTH.	DR.	CK.

BLACK HILLS POWER INC.
WEST RAPID CITY SUBSTATION
P.O. NO: 5010015188
RAPID CITY, SD
SPEC. NO.: SANDMAN STRUCTURAL ENG.
REF. DWG.: 11-HSSD-35

GALVANIZERS, INC.

BLACK HILLS POWER

DRAWN BY	CHECKED BY
SLK	SLK
FILE NAME	CHECK DATE:
RCSD35	1/2/19

TITLE: 230kV A-FRAME - HAF

DATE: 1/2/19

DRAWING NUMBER: 19-RCSD-35

P:\04233\00\DWG\RECORD\WRC\CAD\WRC-C-405F.DWG

DGR ENGINEERING
ROCK RAPIDS, IOWA
(712) 472-2531

DATE	DRAWN BY	NO.	APPROVED BY	REVISION DESCRIPTION
06-20	KLV	1	PDK	CONFORMING TO CONSTRUCTION RECORDS
10-19	SMW	0	PDK	FOR CONSTRUCTION

BLACK HILLS ENERGY
WEST RAPID SUBSTATION
STEEL DETAILS
230 KV A-FRAME HAF

DRAWN BY SMW DATE 10-19
APPROVED BY PDK DATE 10-19
DWG NO. WRC-C-405F
REVISION 1

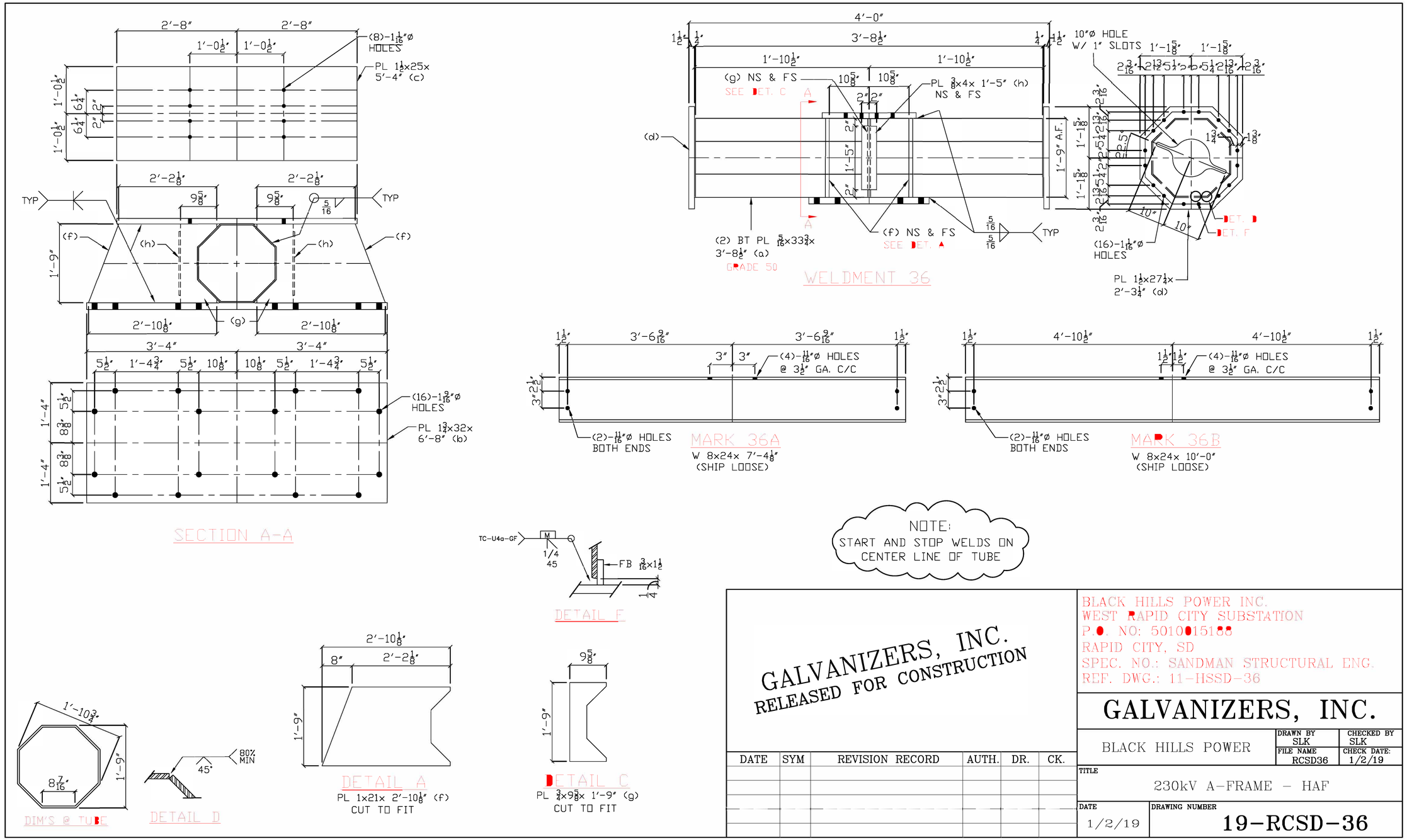

NOTE:
START AND STOP WELDS ON CENTER LINE OF TUBE

GALVANIZERS, INC.
RELEASED FOR CONSTRUCTION

DATE	SYM	REVISION RECORD	AUTH.	DR.	CK.

BLACK HILLS POWER INC.
WEST RAPID CITY SUBSTATION
P.O. NO: 5010015188
RAPID CITY, SD
SPEC. NO.: SANDMAN STRUCTURAL ENG.
REF. DWG.: 11-HSSD-36

GALVANIZERS, INC.

BLACK HILLS POWER

DRAWN BY	CHECKED BY
SLK	SLK
FILE NAME	CHECK DATE:
RCSD36	1/2/19

TITLE: 230kV A-FRAME - HAF

DATE: 1/2/19

DRAWING NUMBER: 19-RCSD-36

P:\0423300\DWG\RECORD\WRC\CAD\WRC-C-405G.DWG

DGR ENGINEERING
ROCK RAPIDS, IOWA
(712) 472-2531

DATE	DRAWN BY	NO.	APPROVED BY	REVISION DESCRIPTION
06-20	KLV	1	PDK	CONFORMING TO CONSTRUCTION RECORDS
10-19	SMW	0	PDK	FOR CONSTRUCTION

BLACK HILLS ENERGY
WEST RAPID SUBSTATION
STEEL DETAILS
230 KV A-FRAME HAF

DRAWN BY SMW DATE 10-19
APPROVED BY PDK DATE 10-19
DWG NO. WRC-C-405G REVISION 1

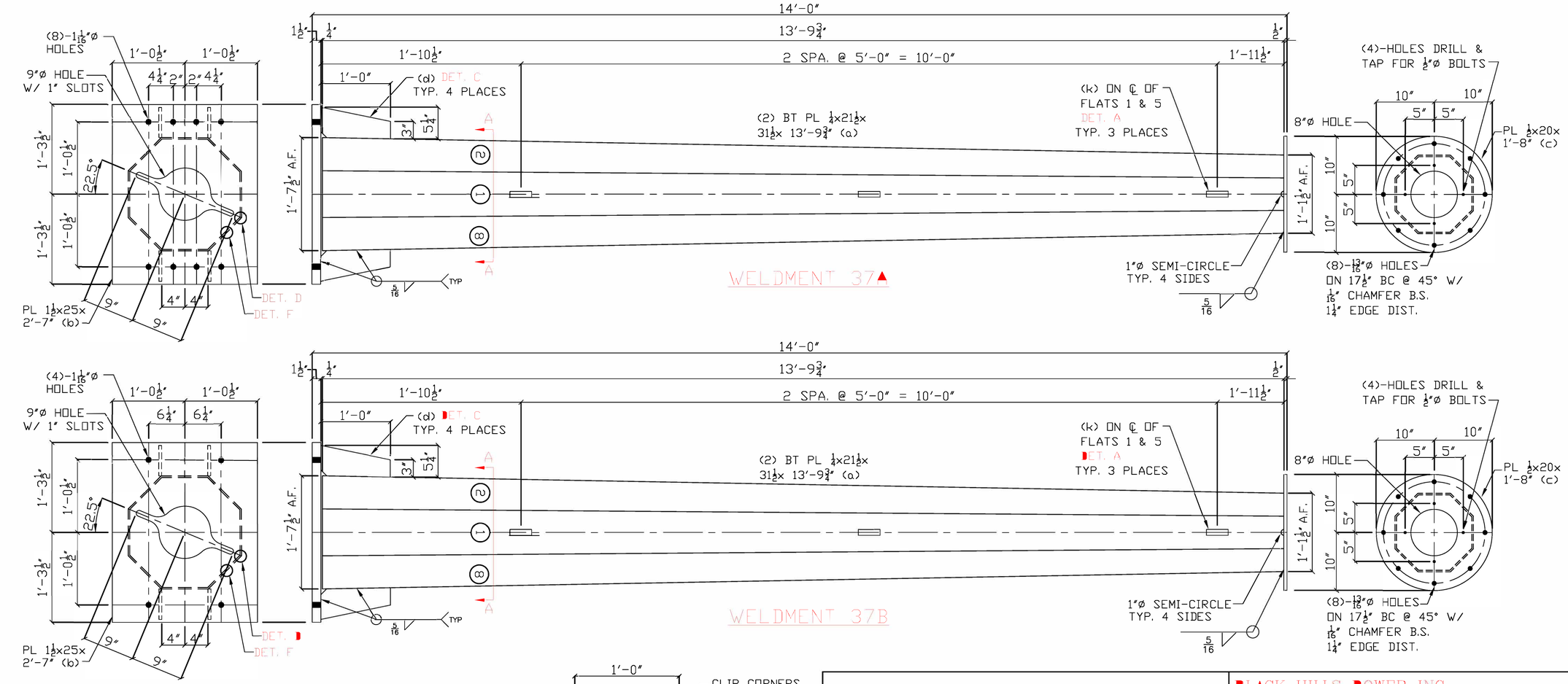

GALVANIZERS, INC.
RELEASED FOR CONSTRUCTION

DATE	SYM	REVISION RECORD	AUTH.	DR.	CK.

BLACK HILLS POWER INC.
WEST RAPID CITY SUBSTATION
P.O. NO: 5010015188
RAPID CITY, SD
SPEC. NO.: SANDMAN STRUCTURAL ENG.
REF. DWG.: 11-HSSD-37

GALVANIZERS, INC.

BLACK HILLS POWER	DRAWN BY SLK	CHECKED BY SLK
	FILE NAME RCSD37	CHECK DATE: 1/2/19

TITLE: 230kV A-FRAME - HAF

DATE: 1/2/19

DRAWING NUMBER: 19-RCSD-37

P:\04\233100\DWG\RECORD\WRC\CAD\WRC-C-405H.DWG

DGR ENGINEERING
ROCK RAPIDS, IOWA
(712) 472-2531

DATE	DRAWN BY	NO.	APPROVED BY	REVISION DESCRIPTION
06-20	KLV	1	PDK	CONFORMING TO CONSTRUCTION RECORDS
10-19	SMW	0	PDK	FOR CONSTRUCTION

BLACK HILLS ENERGY
WEST RAPID SUBSTATION
STEEL DETAILS
230 KV A-FRAME HAF

DRAWN BY SMW DATE 10-19
APPROVED BY PDK DATE 10-19
DWG NO. WRC-C-405H REVISION 1

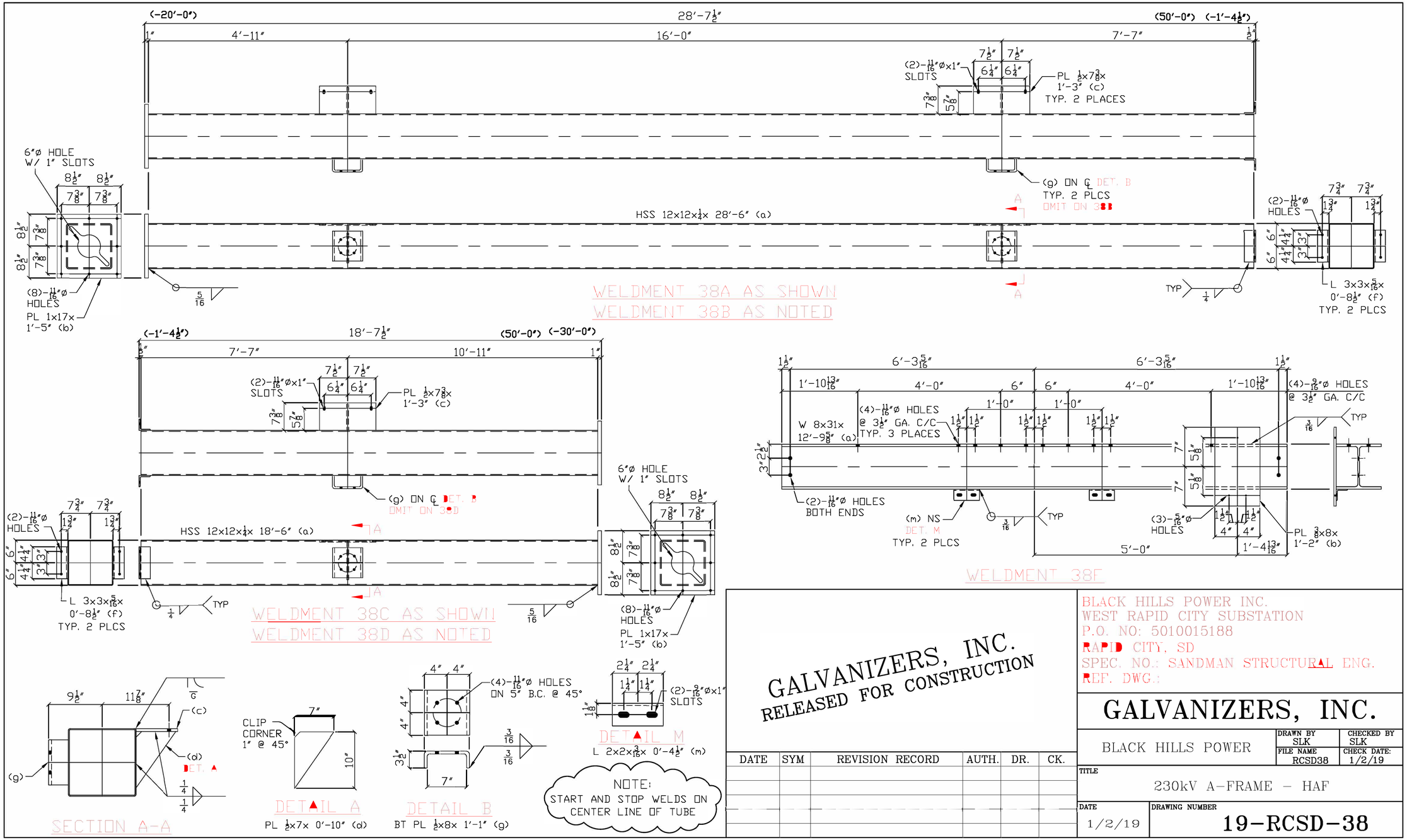

GALVANIZERS, INC.
RELEASED FOR CONSTRUCTION

DATE	SYM	REVISION RECORD	AUTH.	DR.	CK.

BLACK HILLS POWER INC.
WEST RAPID CITY SUBSTATION
P.O. NO: 5010015188
RAPID CITY, SD
SPEC. NO.: SANDMAN STRUCTURAL ENG.
REF. DWG.:

GALVANIZERS, INC.

BLACK HILLS POWER

DRAWN BY	CHECKED BY
SLK	SLK
FILE NAME	CHECK DATE:
RCSD38	1/2/19

TITLE: 230kV A-FRAME – HAF

DATE: 1/2/19

DRAWING NUMBER: 19-RCSD-38

P:\04233\00\DWG\RECORD\WRC\CAD\WRC-C-4051.DWG

DGR ENGINEERING
ROCK RAPIDS, IOWA
(712) 472-2531

DATE	DRAWN BY	NO.	APPROVED BY	REVISION DESCRIPTION
06-20	KLV	1	PDK	CONFORMING TO CONSTRUCTION RECORDS
10-19	SMW	0	PDK	FOR CONSTRUCTION

BLACK HILLS ENERGY

WEST RAPID SUBSTATION

STEEL DETAILS
230 KV A-FRAME HAF

DRAWN BY SMW DATE 0-19
APPROVED BY PDK DATE 10-19
DWG NO. WRC-C-4051 REVISION 1

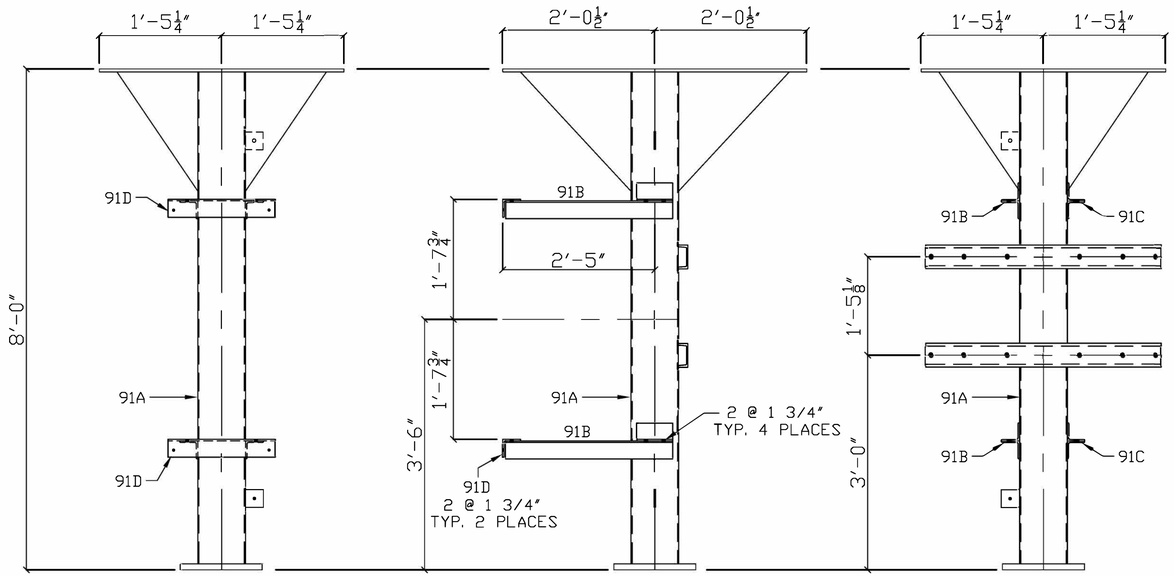

BILL OF MATERIAL

NO PCS	MATERIAL	LG FT	LG IN	MK	REMARK	TOTAL WT BLACK
1	WELDMENT			91A		
1	HSS 8x8x3/16	7	10 1/2	91A		154.6
1	PL 1x14	1	2	B91A		55.6
1	PL 1/2x34 1/2	4	1	C91A		239.5
4	PL 3/8x20	1	8	D91A		85.0
2	C 4x5.4	3	3 1/2	F91A		35.6
4	L 3x3x1/4	0	6	H91A		10.0
2	PL 1/4x3	0	3	K91A		1.4
2	L 3x3x1/4	2	7 1/2	91B	SHIP LOOSE	25.8
2	L 3x3x1/4	2	7 1/2	91C	SHIP LOOSE	25.8
2	L 3x3x1/4	1	8	91D	SHIP LOOSE	16.4
	HARDWARE (+5%)					
13	MB 5/8	0	1 3/4		A325 BOLTS	5.5
13	HHN 5/8 NC				HVY HEX NUT	
26	FW 5/8				HARDENED	
13	PN 5/8				PALNUTS	0.1
					SUBTOTAL	655.3
					3 1/2% GALV.	22.9
					TOTAL WEIGHT PER UNIT	678.2

ONE REQUIRED
TOTAL WEIGHT = 678.2

NOTES:

1. ALL TUBE - ASTM A500, GR. B
2. ALL W-SHAPES - ASTM A992 GR 50
3. ALL PL 1/2" & THICKER - GR 50 UNO
   ALL OTHER PL & SHAPES - A36
4. ALL HOLES AS NOTED
5. GALV. AFTER FABRICATION
   PER ASTM A123.
6. START & STOP WELDS @
   ℄ OF TUBES & OCTAGONS.
7. FOR DETAIL DRAWINGS
   SEE SHEET 91

GALVANIZERS, INC.
RELEASED FOR CONSTRUCTION

DATE	SYM	REVISION RECORD	AUTH.	DR.	CK.

BLACK HILLS POWER INC.
WEST RAPID CITY SUBSTATION
P.O. NO: 5010015188
RAPID CITY, SD
SPEC. NO.: SANDMAN STRUCTURAL ENG.
REF. DWG.: 14-CW-90

GALVANIZERS, INC.

BLACK HILLS POWER

DRAWN BY SLK | CHECKED BY SLK
FILE NAME RCSD90 | CHECK DATE: 1/2/19

TITLE
PPT - 69kV 1ø POWER PT

DATE 1/2/19
DRAWING NUMBER 19-RCSD-90

P:\0423390\DWG\RECORD\WRC\CAD\WRC-C-406A.DWG

DGR ENGINEERING
ROCK RAPIDS, IOWA
(712) 472-2531

DATE	DRAWN BY	NO.	APPROVED BY	REVISION DESCRIPTION
06-20	KLV	1	PDK	CONFORMING TO CONSTRUCTION RECORDS
10-19	SMW	0	PDK	FOR CONSTRUCTION

BLACK HILLS ENERGY
WEST RAPID SUBSTATION
STEEL DETAILS
69 KV POWER PT

DRAWN BY SMW DATE 10-19
APPROVED BY PDK DATE 10-19
DWG NO. WRC-C-406A REVISION NO. 1

DATE	SYM	REVISION RECORD	AUTH.	DR.	CK.

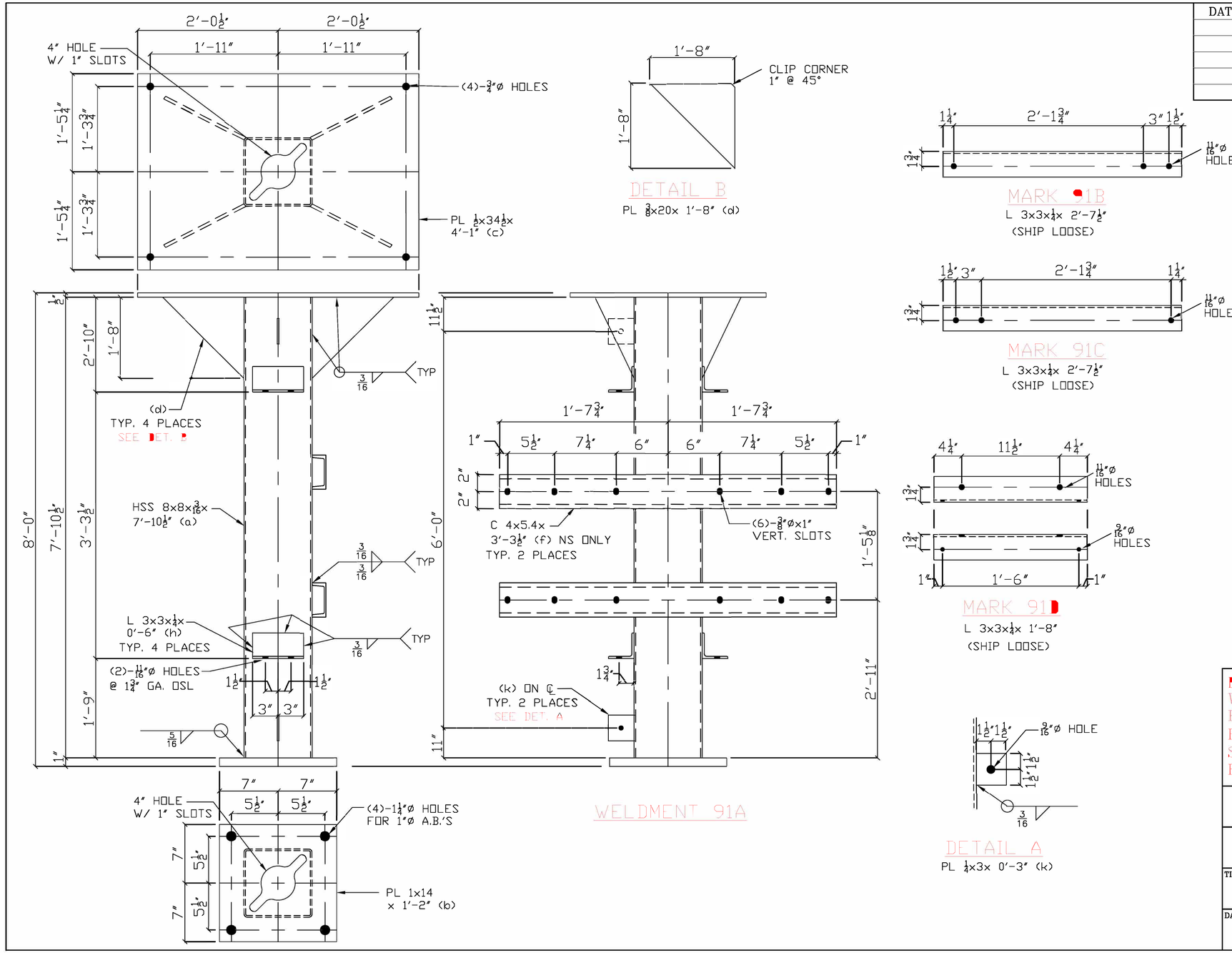

NOTE:
START AND STOP WELDS ON CENTER LINE OF TUBE

GALVANIZERS, INC.
RELEASED FOR CONSTRUCTION

BLACK HILLS POWER INC.
WEST RAPID CITY SUBSTATION
P.O. NO: 5010015188
RAPID CITY, SD
SPEC. NO.: SANDMAN STRUCTURAL ENG.
REF. DWG.: 14-CW-91

GALVANIZERS, INC.

BLACK HILLS POWER	DRAWN BY SLK	CHECKED BY SLK
	FILE NAME RCSD91	CHECK DATE: 1/2/19

TITLE: PPT – 69kV 1ø POWER PT

DATE: 1/2/19

DRAWING NUMBER: 19-RCSD-91

DATE	DRAWN BY	NO.	APPROVED BY	REVISION DESCRIPTION
06-20	KLV	1	PDK	CONFORMING TO CONSTRUCTION RECORDS
10-19	SMW	0	PDK	FOR CONSTRUCTION

BLACK HILLS ENERGY

WEST RAPID SUBSTATION

STEEL DETAILS
69 KV POWER PT

DRAWN BY SMW DATE 10-19
APPROVED BY PDK DATE 10-19
DWG NO. WRC-C-406B REVISION 1

DGR ENGINEERING
ROCK RAPIDS, IOWA
(712) 472-2531

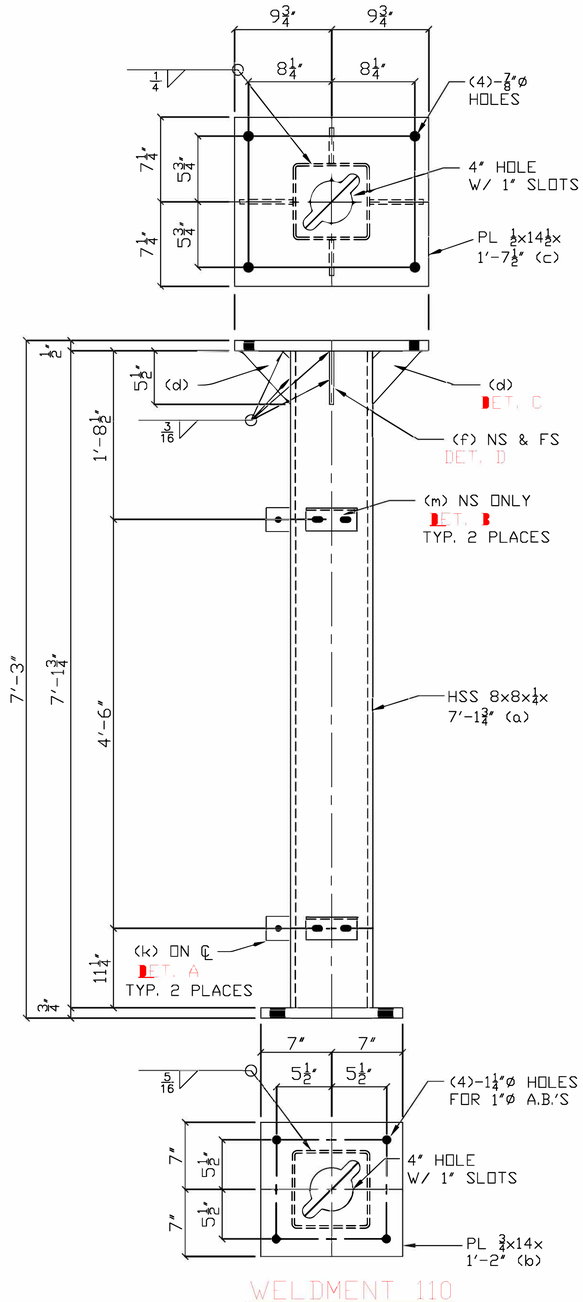

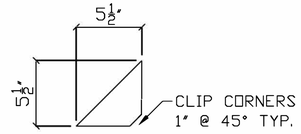

DETAIL C

PL 1/4x5 1/2x 0'-5 1/2" (d)

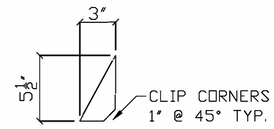

DETAIL D

PL 1/4x3x 0'-5 1/2" (f)

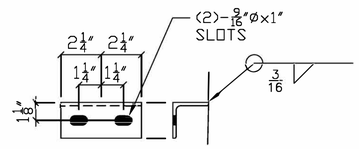

DETAIL B

L 2x2x3/16x 0'-4 1/2" (m)

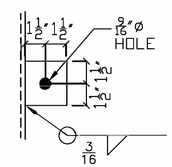

DETAIL A

FB 1/4x3x 0'-3" (k)

BILL OF MATERIAL

NO PCS	MATERIAL	LG FT	LG IN	MK	REMARK	TOTAL WT BLACK
1	WELDMENT			110		
1	HSS 8x8x1/4	7	1 3/4	110		184.5
1	PL 3/4x14	1	2	B110		41.7
1	PL 1/2x14 1/2	1	7 1/2	C110		40.1
2	PL 1/4x5 1/2	0	5 1/2	D110		2.2
2	PL 1/4x3	0	5 1/2	F110		1.2
2	FB 1/4x3	0	3	K110		1.4
2	L 2x2x3/16	0	4 1/2	M110		2.0
					SUBTOTAL	273.1
					3 1/2% GALV.	9.6
					TOTAL WEIGHT PER UNIT	282.7

4 REQUIRED

TOTAL WEIGHT = 1,130.8

NOTES:

1. ALL TUBE - ASTM A500, GR. B
2. ALL W-SHAPES - ASTM A992 GR 50
3. ALL PL 1/2" & THICKER - GR 50 UNO
   ALL OTHER PL & SHAPES - A36 UNO
4. ALL HOLES AS NOTED
5. GALV. AFTER FABRICATION PER ASTM A123.
6. START & STOP WELDS @ ℄ OF TUBES & OCTAGONS.

GALVANIZERS, INC.
RELEASED FOR CONSTRUCTION

DATE	SYM	REVISION RECORD	AUTH.	DR.	CK.

BLACK HILLS POWER INC.
WEST RAPID CITY SUBSTATION
P.O. NO: 5010015188
RAPID CITY, SD
SPEC. NO.: SANDMAN STRUCTURAL ENG.
REF. DWG.: 11-HSSD-110

GALVANIZERS, INC.

BLACK HILLS POWER

DRAWN BY	CHECKED BY
SLK	SLK
FILE NAME RCSD110	CHECK DATE: 1/2/19

TITLE: CVT W/O J-BOX

DATE: 1/2/19

DRAWING NUMBER: 19-RCSD-110

P:\04233\00\DWG\RECORD\WRC\CAD\WRC-C-407.DWG

DGR ENGINEERING
ROCK RAPIDS, IOWA
(712) 472-2531

DATE	BRAWN BY	NO.	APPROVED BY	REVISION DESCRIPTION
06-20	KLV	1	PDK	CONFORMING TO CONSTRUCTION RECORDS
10-19	SMW	0	PDK	FOR CONSTRUCTION

BLACK HILLS ENERGY

WEST RAPID SUBSTATION

STEEL DETAILS
230 KV CVT WITHOUT J-BOX

DRAWN BY SMW DATE 10-19
APPROVED BY PDK DATE 10-19
DWG NO. WRC-C-407 REVISION 1

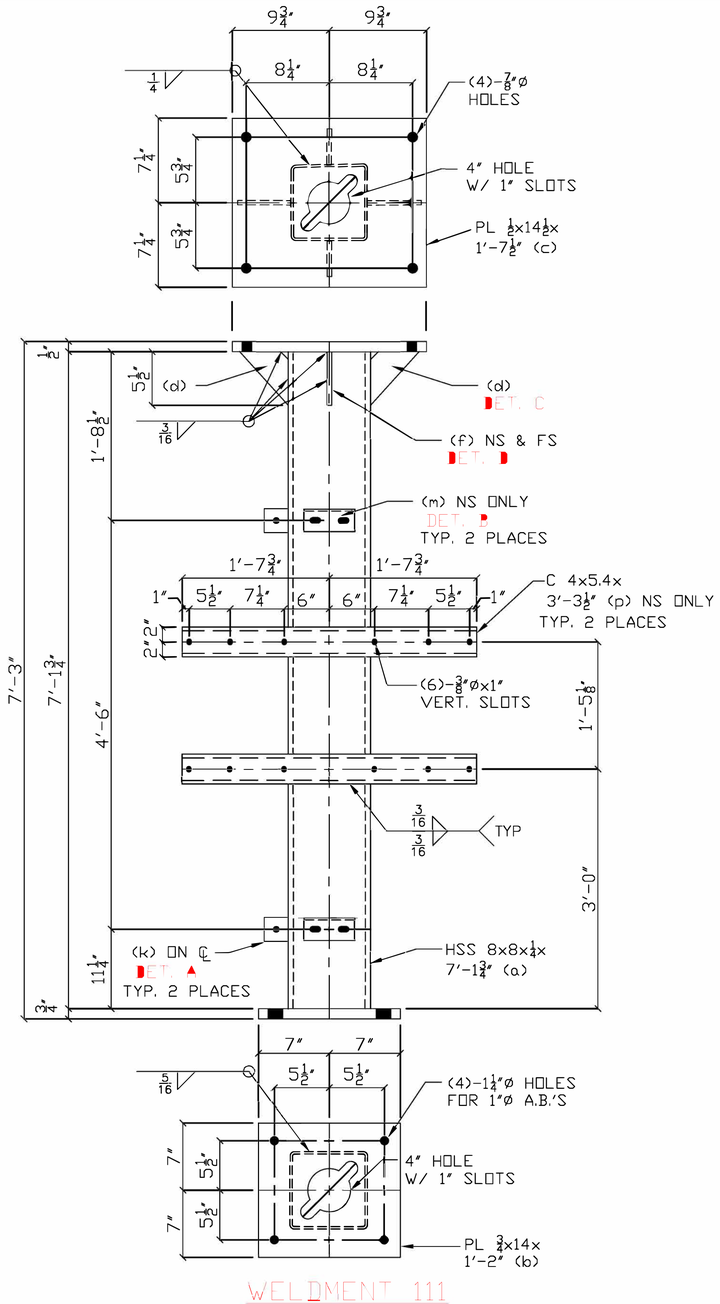

WELDMENT 111

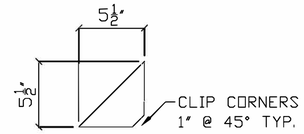

DETAIL C

PL 1/4x5 1/2x 0'-5 1/2" (d)

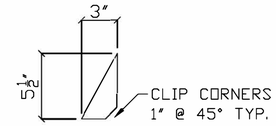

DETAIL D

PL 1/4x3x 0'-5 1/2" (f)

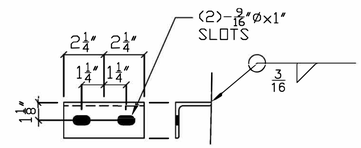

DETAIL B

L 2x2x3/16x 0'-4 1/2" (m)

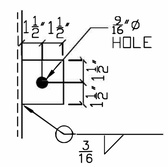

DETAIL A

FB 1/4x3x 0'-3" (k)

BILL OF MATERIAL

NO PCS	MATERIAL	LG FT	LG IN	MK	REMARK	TOTAL WT BLACK
1	WELDMENT			111		
1	HSS 8x8x1/4	7	1 3/4	111		184.5
1	PL 3/4x14	1	2	B111		41.7
1	PL 1/2x14 1/2	1	7 1/2	C111		40.1
2	PL 1/4x5 1/2	0	5 1/2	D111		2.2
2	PL 1/4x3	0	5 1/2	F111		1.2
2	FB 1/4x3	0	3	K111		1.4
2	L 2x2x3/16	0	4 1/2	M111		2.0
2	C 4x5.4	3	3 1/2	P111		35.6
					SUBTOTAL	308.7
					3 1/2% GALV.	10.8
					TOTAL WEIGHT PER UNIT	319.5

3 REQUIRED

TOTAL WEIGHT = 958.5

NOTES:

1. ALL TUBE - ASTM A500, GR. B
2. ALL W-SHAPES - ASTM A992 GR 50
3. ALL PL 1/2" & THICKER - GR 50 UNO ALL OTHER PL & SHAPES - A36 UNO
4. ALL HOLES AS NOTED
5. GALV. AFTER FABRICATION PER ASTM A123.
6. START & STOP WELDS @ ℄ OF TUBES & OCTAGONS.

GALVANIZERS, INC.
RELEASED FOR CONSTRUCTION

DATE	SYM	REVISION RECORD	AUTH.	DR.	CK.

BLACK HILLS POWER INC.
WEST RAPID CITY SUBSTATION
P.O. NO: 5010015188
RAPID CITY, SD
SPEC. NO.: SANDMAN STRUCTURAL ENG.
REF. DWG.: 11-HSSD-110

GALVANIZERS, INC.

BLACK HILLS POWER

DRAWN BY SLK | CHECKED BY SLK
FILE NAME RCSD111 | CHECK DATE: 1/2/19

TITLE: CVT W/ J-BOX

DATE 1/2/19 | DRAWING NUMBER 19-RCSD-111

P:\04233\00\DWG\RECORD\WRC\CAD\WRC-C-408.DWG

DGR ENGINEERING
ROCK RAPIDS, IOWA
(712) 472-2531

DATE	DRAWN BY	NO.	APPROVED BY	REVISION DESCRIPTION
06-20	KLV	1	PDK	CONFORMING TO CONSTRUCTION RECORDS
10-19	SMW	0	PDK	FOR CONSTRUCTION

BLACK HILLS ENERGY

WEST RAPID SUBSTATION

STEEL DETAILS
230 KV CVT WITH J-BOX

DRAWN BY SMW DATE 10-19 | DWG NO. WRC-C-408 | REVISION 1
APPROVED BY PDK DATE 10-19

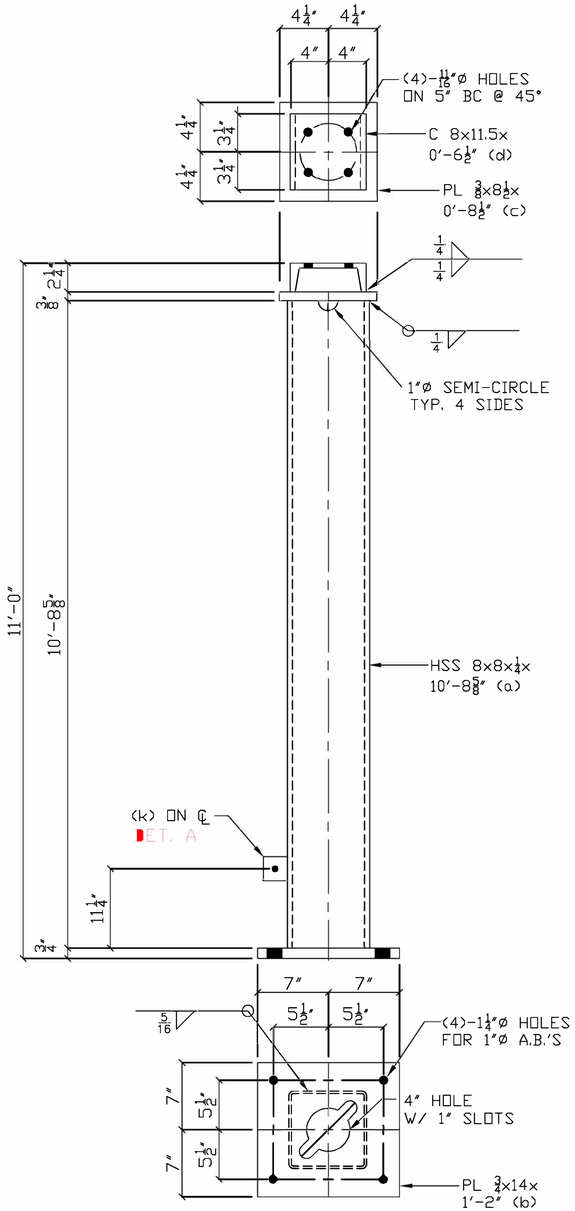

WELDMENT 120

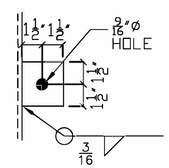

DETAIL A

FB 1/4x3x 0'-3" (k)

BILL OF MATERIAL

NO PCS	MATERIAL	LG FT	LG IN	MK	REMARK	TOTAL WT BLACK
1	WELDMENT			120		
1	HSS 8x8x1/4	10	8 5/8	120		276.8
1	PL 3/4x14	1	2	B120		41.7
1	PL 3/8x8 1/2	0	8 1/2	C120		7.7
1	C 8x11.5	0	6 1/2	D120		6.3
1	FB 1/4x3	0	3	K120		0.7
					SUBTOTAL	333.2
					3 1/2% GALV.	11.7
					TOTAL WEIGHT PER UNIT	344.9

16 REQUIRED

TOTAL WEIGHT = 5,518.4

NOTES:

1. ALL TUBE - ASTM A500, GR. B
2. ALL W-SHAPES - ASTM A992 GR 50
3. ALL PL 1/2" & THICKER - GR 50 UNO
   ALL OTHER PL & SHAPES - A36 UNO
4. ALL HOLES AS NOTED
5. GALV. AFTER FABRICATION
   PER ASTM A123.
6. START & STOP WELDS @
   ℄ OF TUBES & OCTAGONS.

GALVANIZERS, INC.
RELEASED FOR CONSTRUCTION

DATE	SYM	REVISION RECORD	AUTH.	DR.	CK.

BLACK HILLS POWER INC.
WEST RAPID CITY SUBSTATION
P.O. NO: 5010015188
RAPID CITY, SD
SPEC. NO.: SANDMAN STRUCTURAL ENG.
REF. DWG.: 11-HSSD-120

GALVANIZERS, INC.

BLACK HILLS POWER

DRAWN BY	CHECKED BY
SLK	SLK
FILE NAME RCSD120	CHECK DATE: 1/2/19

TITLE: 2L1

DATE: 1/2/19

DRAWING NUMBER: 19-RCSD-120

P:\042233\00\DWG\RECORD\WRC\CAD\WRC-C-409.DWG

DGR ENGINEERING
ROCK RAPIDS, IOWA
(712) 472-2531

DATE	DRAWN BY	NO.	APPROVED BY	REVISION DESCRIPTION
06-20	KLV	1	PDK	CONFORMING TO CONSTRUCTION RECORDS
10-19	SMW	0	PDK	FOR CONSTRUCTION

BLACK HILLS ENERGY

WEST RAPID SUBSTATION

STEEL DETAILS
230 KV BUS SUPPORT 2L1

DRAWN BY SMW DATE 10-19
APPROVED BY PDK DATE 10-19

DWG NO. WRC-C-409 REVISION 1

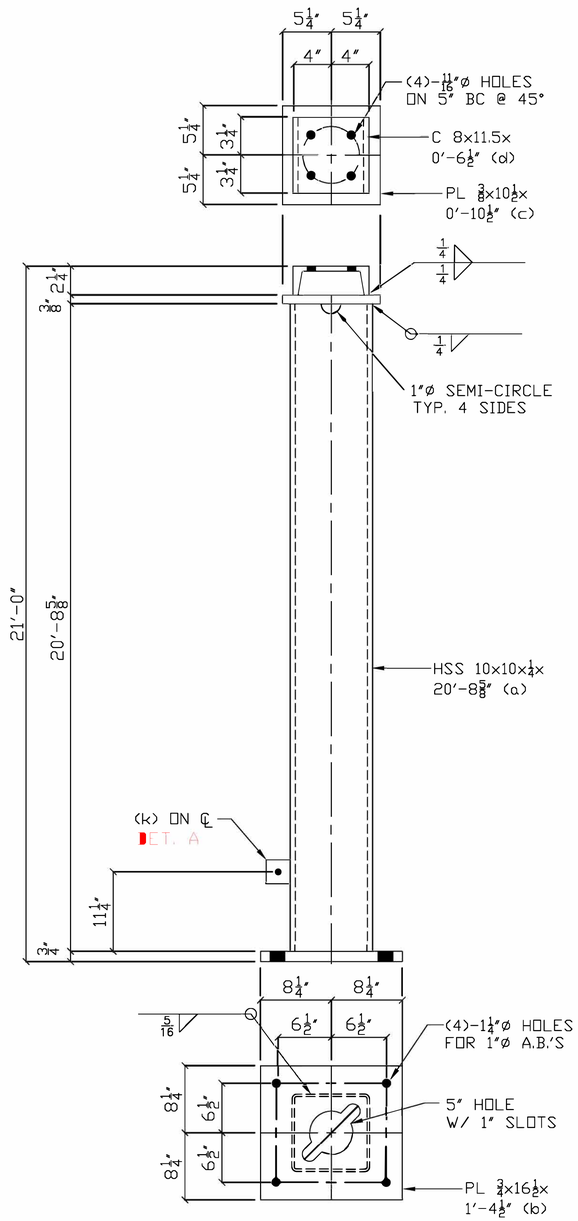

WELDMENT 125

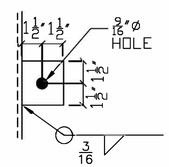

DETAIL A

FB ¼x3x 0'-3" (k)

BILL OF MATERIAL

NO PCS	MATERIAL	LG FT	LG IN	MK	REMARK	TOTAL WT BLACK
1	WELDMENT			125		
1	HSS 10x10x1/4	20	8 5/8	125		676.1
1	PL 3/4x16 1/2	1	4 1/2	B125		57.9
1	PL 3/8x10 1/2	0	10 1/2	C125		11.8
1	C 8x11.5	0	6 1/2	D125		6.3
1	FB 1/4x3	0	3	K125		0.7
					TOTAL WT. BLK.	752.8
					3 1/2% GALV.	26.4
					TOTAL WEIGHT PER UNIT	779.2

7 REQUIRED

TOTAL WEIGHT = 5,454.4

NOTES:

1. ALL TUBE - ASTM A500, GR. B
2. ALL W-SHAPES - ASTM A992 GR 50
3. ALL PL 1/2" & THICKER - GR 50 UNO
   ALL OTHER PL & SHAPES - A36 UNO
4. ALL HOLES AS NOTED
5. GALV. AFTER FABRICATION PER ASTM A123.
6. START & STOP WELDS @ ℄ OF TUBES & OCTAGONS.

GALVANIZERS, INC.
RELEASED FOR CONSTRUCTION

DATE	SYM	REVISION RECORD	AUTH.	DR.	CK.

BLACK HILLS POWER INC.
WEST RAPID CITY SUBSTATION
P.O. NO: 5010015188
RAPID CITY, SD
SPEC. NO.: SANDMAN STRUCTURAL ENG.
REF. DWG.: 11-HSSD-125

GALVANIZERS, INC.

BLACK HILLS POWER

DRAWN BY SLK | CHECKED BY SLK
FILE NAME RCSD125 | CHECK DATE: 1/2/19

TITLE 2H1

DATE 1/2/19

DRAWING NUMBER 19-RCSD-125

P:\041233\00\DWG\RECORD\WRCC\AD\WRC-C-410A.DWG

DGR ENGINEERING
ROCK RAPIDS, IOWA
(712) 472-2531

DATE	DRAWN BY	NO.	APPROVED BY	REVISION DESCRIPTION
06-20	KLV	1	PDK	CONFORMING TO CONSTRUCTION RECORDS
10-19	SMW	0	PDK	FOR CONSTRUCTION

BLACK HILLS ENERGY
WEST RAPID SUBSTATION
STEEL DETAILS
230 KV BUS SUPPORT 2H1

DRAWN BY SMW DATE 10-19
APPROVED BY PDK DATE 10-19
DWG NO. WRC-C-410A REVISION 1

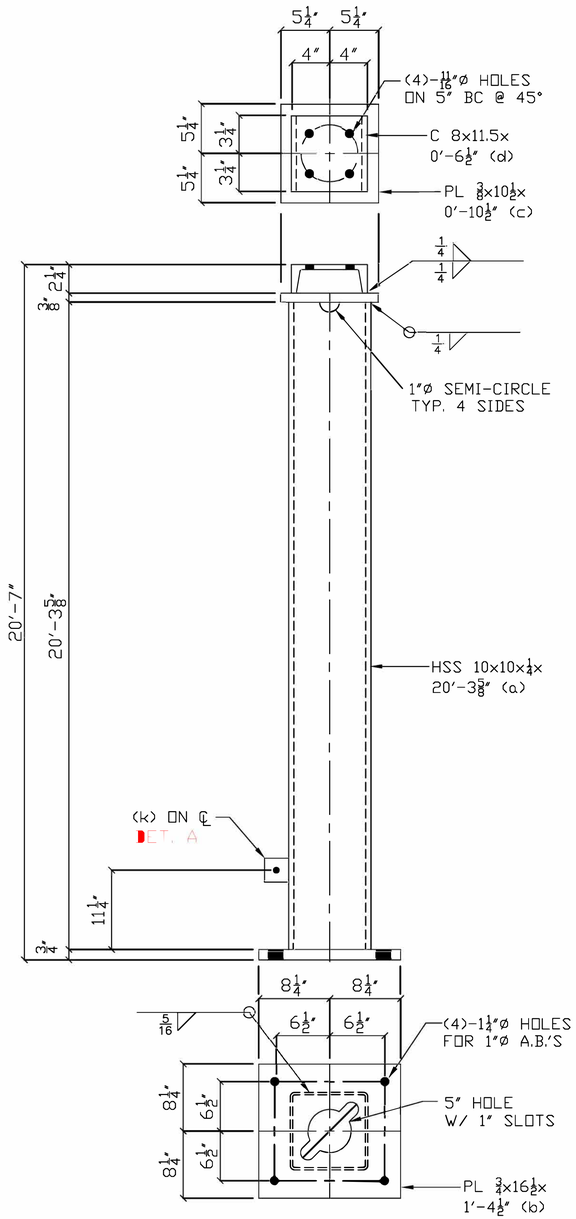

WELDMENT 127

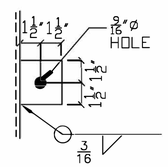

DETAIL A

FB 1/4x3x 0'-3" (k)

BILL OF MATERIAL

NO PCS	MATERIAL	LG FT	LG IN	MK	REMARK	TOTAL WT BLACK
1	WELDMENT			127		
1	HSS 10x10x1/4	20	3 5/8	127		662.5
1	PL 3/4x16 1/2	1	4 1/2	B127		57.9
1	PL 3/8x10 1/2	0	10 1/2	C127		11.8
1	C 8x11.5	0	6 1/2	D127		6.3
1	FB 1/4x3	0	3	K127		0.7
					TOTAL WT. BLK.	739.2
					3 1/2% GALV.	25.9
TOTAL WEIGHT PER UNIT						765.1

3 REQUIRED

TOTAL WEIGHT = 2,295.3

NOTES:

1. ALL TUBE - ASTM A500, GR. B
2. ALL W-SHAPES - ASTM A992 GR 50
3. ALL PL 1/2" & THICKER - GR 50 UNO
   ALL OTHER PL & SHAPES - A36 UNO
4. ALL HOLES AS NOTED
5. GALV. AFTER FABRICATION
   PER ASTM A123.
6. START & STOP WELDS @
   ℄ OF TUBES & OCTAGONS.

GALVANIZERS, INC.
RELEASED FOR CONSTRUCTION

DATE	SYM	REVISION RECORD	AUTH.	DR.	CK.

BLACK HILLS POWER INC.
WEST RAPID CITY SUBSTATION
P.O. NO: 5010015188
RAPID CITY, SD
SPEC. NO.: SANDMAN STRUCTURAL ENG.
REF. DWG.: 11-HSSD-125

GALVANIZERS, INC.

BLACK HILLS POWER

DRAWN BY SLK | CHECKED BY SLK
FILE NAME RCSD127 | CHECK DATE: 1/2/19

TITLE 2H1S

DATE 1/2/19

DRAWING NUMBER 19-RCSD-127

P:\04123\001\DWG\RECORD\WRCC\CAD\WRC-C-410B.DWG

DGR ENGINEERING
ROCK RAPIDS, IOWA
(712) 472-2531

DATE	DRAWN BY	NO.	APPROVED BY	REVISION DESCRIPTION
06-20	KLV	1	PDK	CONFORMING TO CONSTRUCTION RECORDS
10-19	SMW	0	PDK	FOR CONSTRUCTION

BLACK HILLS ENERGY

WEST RAPID SUBSTATION

STEEL DETAILS
230 KV BUS SUPPORT 2H1S

DRAWN BY SMW DATE 10-19
APPROVED BY PDK DATE 10-19
DWG NO. WRC-C-410B SECTION 1 OF 1

DATE	SYM	REVISION RECORD	AUTH.	DR.	CK.

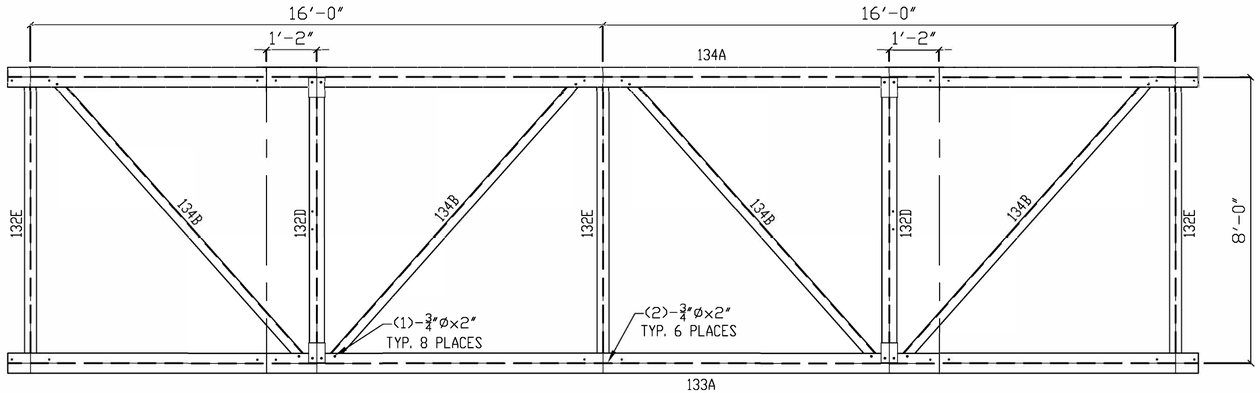

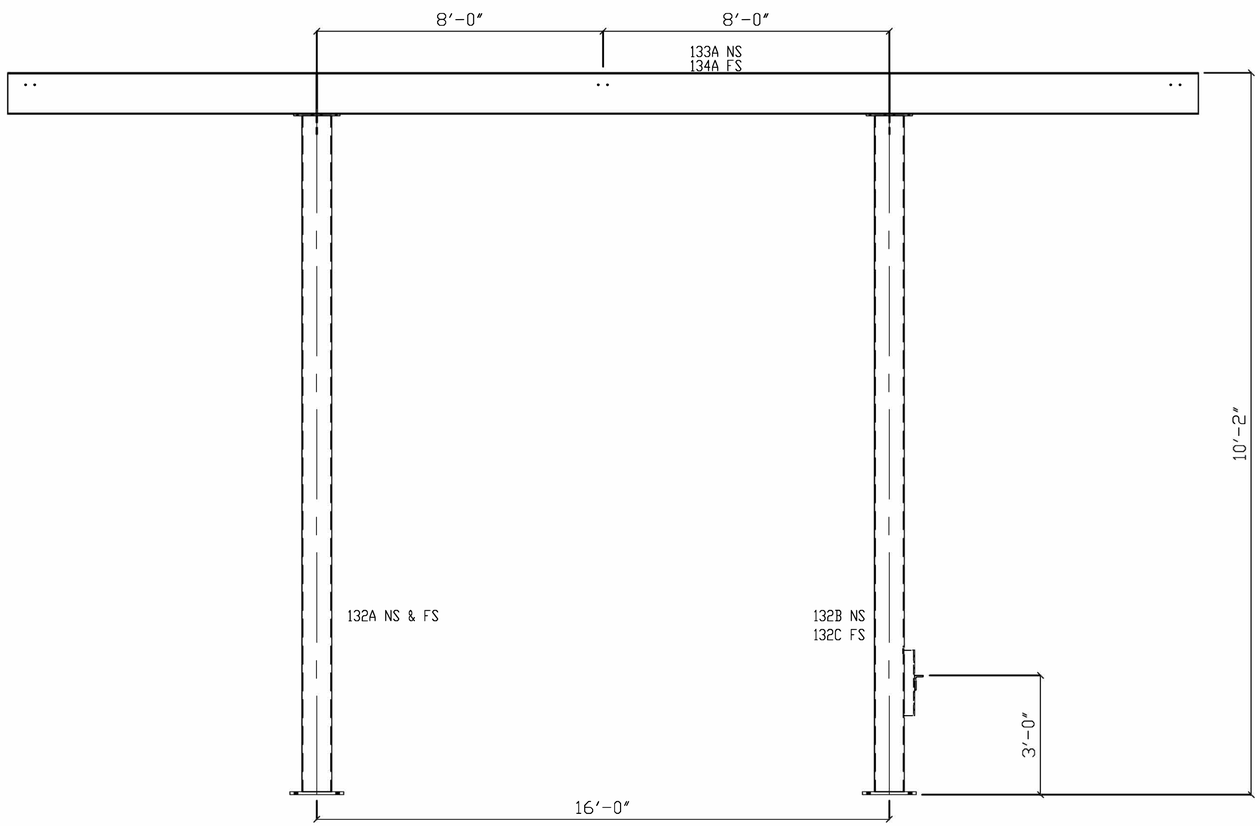

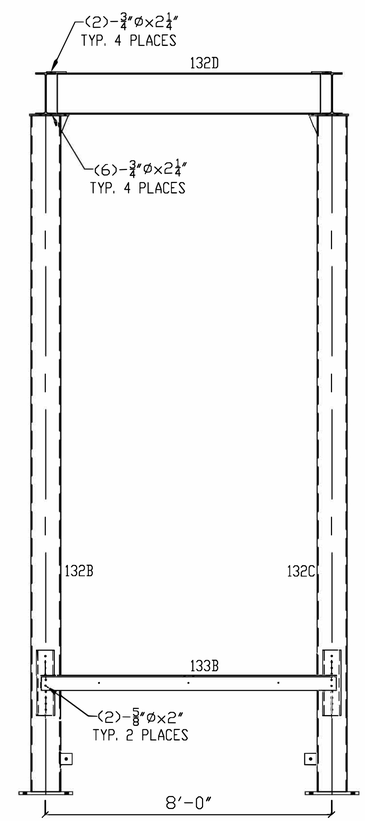

GALVANIZERS, INC.
RELEASED FOR CONSTRUCTION

BLACK HILLS POWER INC.
WEST RAPID CITY SUBSTATION
P.O. NO: 5010015188
RAPID CITY, SD
SPEC. NO.: SANDMAN STRUCTURAL ENG.
REF. DWG.: 11-HSSD-130

GALVANIZERS, INC.

BLACK HILLS POWER	DRAWN BY SLK	CHECKED BY SLK
	FILE NAME RCSD130	CHECK DATE: 1/2/19

TITLE
2LS – 230KV SWITCH STAND (LOW)

DATE	DRAWING NUMBER
1/2/19	19-RCSD-130

P:\04233\00\DWG\RECORD\WRC\CAD\WRC-C-411A.DWG

DGR ENGINEERING
ROCK RAPIDS, IOWA
(712) 472-2531

DATE	DRAWN BY	NO.	APPROVED BY	REVISION DESCRIPTION
06-20	KLV	1	PDK	CONFORMING TO CONSTRUCTION RECORDS
10-19	SMW	0	PDK	FOR CONSTRUCTION

BLACK HILLS ENERGY
WEST RAPID SUBSTATION
STEEL DETAILS
230 KV SWITCH STAND 2LS

DRAWN BY SMW DATE 10-19
APPROVED BY PDK DATE 10-19
DWG NO. WRC-C-411A REVISION 1

BILL OF MATERIAL

NO PCS	MATERIAL	LG FT	LG IN	MK	REMARK	TOTAL WT BLACK
2	WELDMENTS			132A		
2	HSS 8x8x1/4	8	10 7/8	132A		460.0
2	PL 3/4x14	1	2	B132A		83.4
2	PL 1/2x12 1/4	1	3 1/2	C132A		53.8
2	PL 3/8x3 1/2	0	6 1/4	D132A		4.8
2	FB 1/4x3	0	3	K132A		1.4
1	WELDMENT			132B		
1	HSS 8x8x1/4	8	10 7/8	132B		230.0
1	PL 3/4x14	1	2	B132B		41.7
1	PL 1/2x12 1/4	1	3 1/2	C132B		26.9
1	PL 3/8x3 1/2	0	6 1/4	D132B		2.4
1	MC 6x18	1	10	G132B		33.0
1	FB 1/4x3	0	3	K132B		0.7
1	WELDMENT			132C		
1	HSS 8x8x1/4	8	10 7/8	132C		230.0
1	PL 3/4x14	1	2	B132C		41.7
1	PL 1/2x12 1/4	1	3 1/2	C132C		26.9
1	PL 3/8x3 1/2	0	6 1/4	D132C		2.4
1	MC 6x18	1	10	G132C		33.0
1	FB 1/4x3	0	3	K132C		0.7
2	WELDMENTS			132D		
2	W 14x22	7	4 1/4	132D		323.6
4	PL 1/2x5 1/2	0	6 5/8	B132D		20.8
3	WELDMENTS			132E		
3	W 8x10	7	10 3/4	132E		237.0
12	L 3x3x1/4	0	3	B132E		15.6
1	WELDMENT			133A		
1	W 14x30	33	3 1/4	133A		998.2
4	PL 3/8x3	1	1	B133A		16.8
1	L 5x3x1/2	8	3	133B	SHIP LOOSE	105.6

BILL OF MATERIAL

NO PCS	MATERIAL	LG FT	LG IN	MK	REMARK	TOTAL WT BLACK
1	WELDMENT			134A		
1	W 14x30	33	3 1/4	134A		998.2
4	PL 3/8x3	1	1	B134A		16.8
4	L 3x3x1/4	10	4 1/2	134B	SHIP LOOSE	203.6
	HARDWARE (+5%)					
21	MB 3/4	0	2		A325 BOLTS	14.3
34	MB 3/4	0	2 1/4		A325 BOLTS	23.8
55	HHN 3/4 NC				HVY HEX NUTS	
110	FW 3/4				HARDENED	
55	MFN 3/4				MF LOCKNUTS	4.9
5	MB 5/8	0	2		A325 BOLTS	2.0
5	HHN 5/8 NC				HVY HEX NUTS	
10	FW 5/8				HARDENED	
5	MFN 5/8				MF LOCKNUTS	0.1
					SUBTOTAL	4254.1
					3 1/2% GALV.	148.9
TOTAL WEIGHT PER UNIT						4403.0

8 REQUIRED
TOTAL WEIGHT = 35,224.0

NOTES:

1. FOR ERECTION DRAWINGS SEE SHEET 130
2. FOR DETAIL DRAWINGS SEE SHEETS 132-134
3. ALL TUBE - ASTM A500, GR. B
4. ALL PL 1/2" & THICKER - GR 50 UNO ALL OTHER PL & SHAPES - A36 UNO
5. ALL HOLES AS NOTED
6. GALV. AFTER FABRICATION PER ASTM A123
7. START & STOP WELDS @ ℄ OF TUBES & OCTAGONS.

GALVANIZERS, INC.
RELEASED FOR CONSTRUCTION

DATE	SYM	REVISION RECORD	AUTH.	DR.	CK.

BLACK HILLS POWER INC.
WEST RAPID CITY SUBSTATION
P.O. NO: 5010015188
RAPID CITY, SD
SPEC. NO.: SANDMAN STRUCTURAL ENG.
REF. DWG.: 11-HSSD-131

GALVANIZERS, INC.

BLACK HILLS POWER

DRAWN BY SLK | CHECKED BY SLK
FILE NAME RCSD131 | CHECK DATE: 1/2/19

TITLE
2LS - 230KV SWITCH STAND (LOW)

DATE 1/2/19 | DRAWING NUMBER 19-RCSD-131

DATE	DRAWN BY	NO.	APPROVED BY	REVISION DESCRIPTION
06-20	KLV	1	PDK	CONFORMING TO CONSTRUCTION RECORDS
10-19	SMW	0	PDK	FOR CONSTRUCTION

BLACK HILLS ENERGY
WEST RAPID SUBSTATION
STEEL DETAILS
230 KV SWITCH STAND 2LS

DRAWN BY SMW DATE 10-19
APPROVED BY PDK DATE 10-19
DWG NO. WRC-C-411B SHEET 1 OF

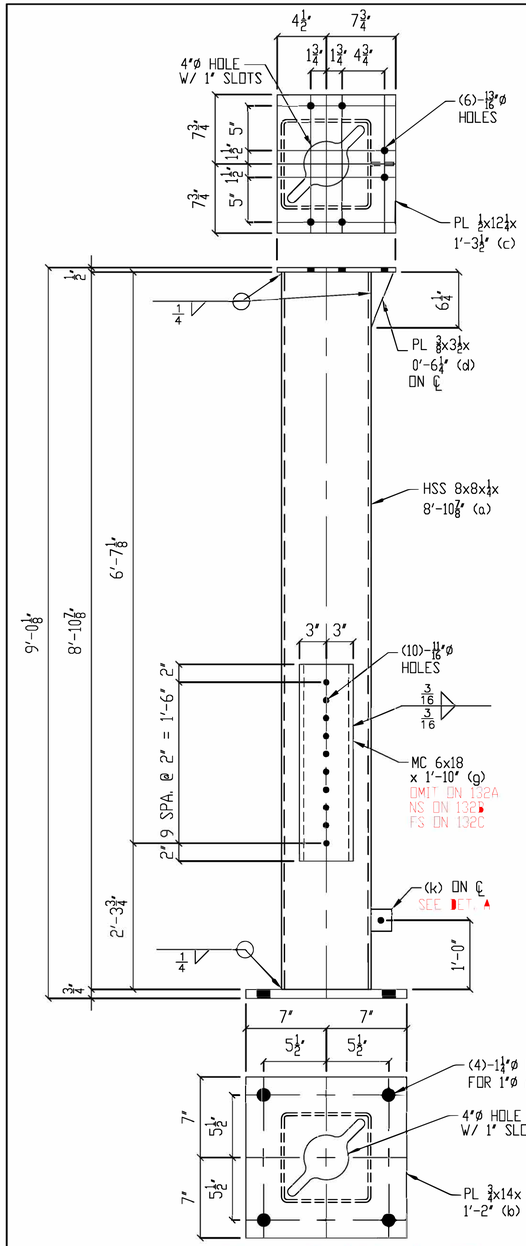

WELDMENT 132A AS NOTED
WELDMENT 132B AS NOTED
WELDMENT 132C AS NOTED

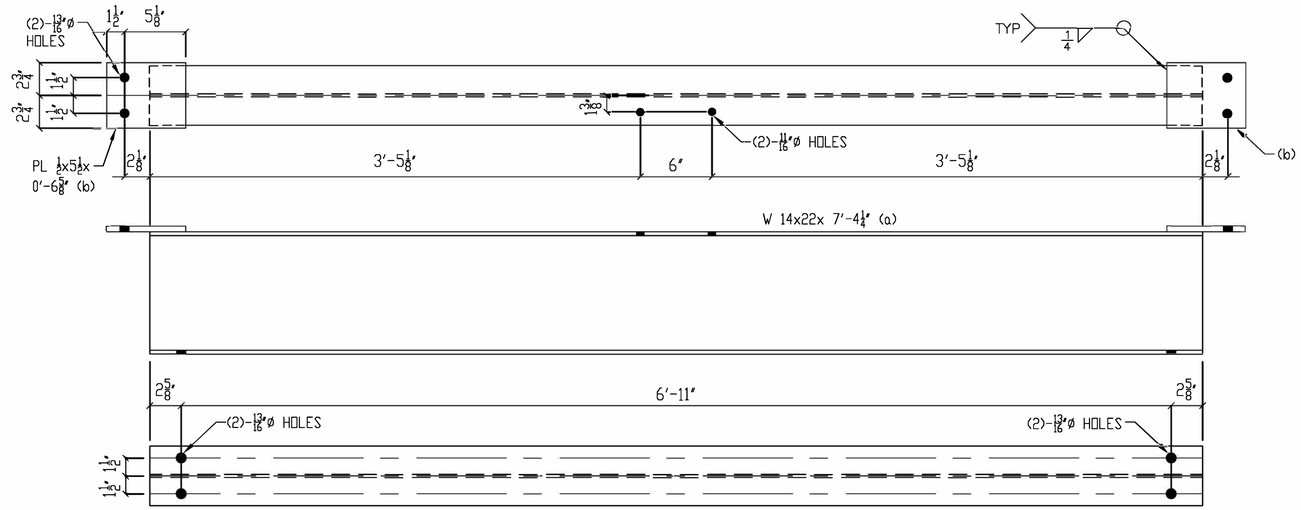

WELDMENT 132D

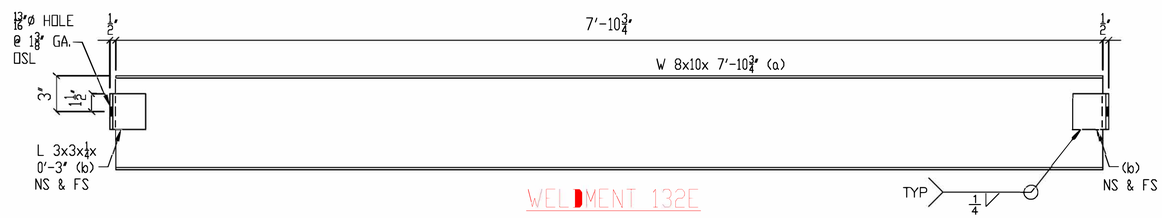

WELDMENT 132E

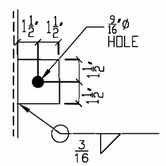

DETAIL A

FB 1/4x3x 0'-3" (k)

NOTE:
START AND STOP WELDS ON
CENTER LINE OF TUBE

GALVANIZERS, INC.
RELEASED FOR CONSTRUCTION

DATE	SYM	REVISION RECORD	AUTH.	DR.	CK.

BLACK HILLS POWER INC.
WEST RAPID CITY SUBSTATION
P.O. NO: 5010015188
RAPID CITY, SD
SPEC. NO.: SANDMAN STRUCTURAL ENG.
REF. DWG.: 11-HSSD-132

GALVANIZERS, INC.

BLACK HILLS POWER

DRAWN BY	CHECKED BY
SLK	SLK
FILE NAME RCSD132	CHECK DATE: 1/2/19

TITLE
2LS - 230KV SWITCH STAND (LOW)

DATE 1/2/19

DRAWING NUMBER 19-RCSD-132

P:\04023300\DWG\RECORD\WRCC\CAD\WRC-C-411C.DWG

DGR ENGINEERING
ROCK RAPIDS, IOWA
(712) 472-2531

DATE	DRAWN BY	NO.	APPROVED BY	REVISION DESCRIPTION
06-20	KLV	1	PDK	CONFORMING TO CONSTRUCTION RECORDS
10-19	SMW	0	PDK	FOR CONSTRUCTION

BLACK HILLS ENERGY
WEST RAPID SUBSTATION
STEEL DETAILS
230 KV SWITCH STAND 2LS

DRAWN BY SMW DATE 10-19
APPROVED BY PDK DATE 10-19
DWG NO. WRC-C-411C SCALE: NONE REV 1

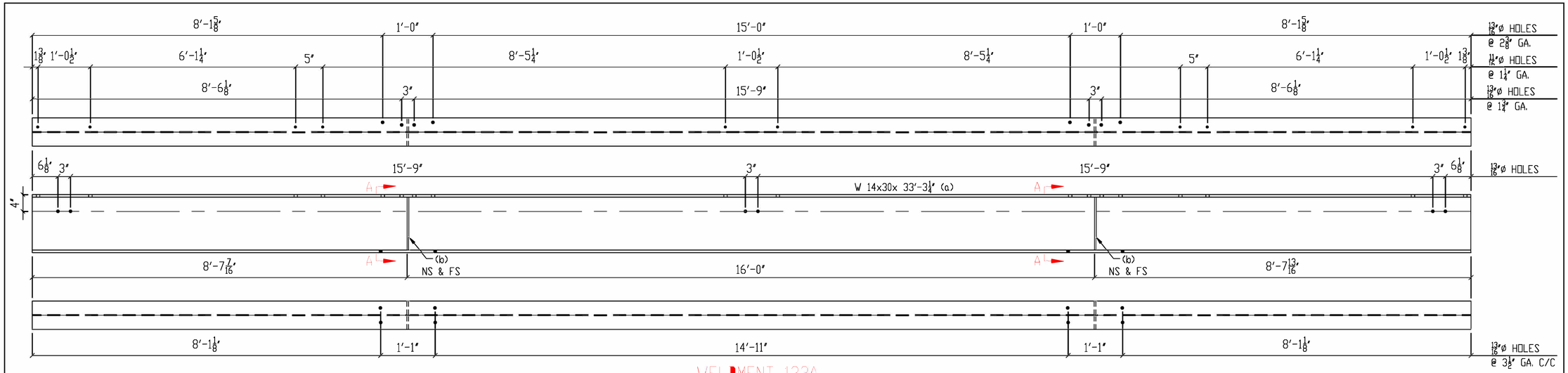

WELDMENT 133A

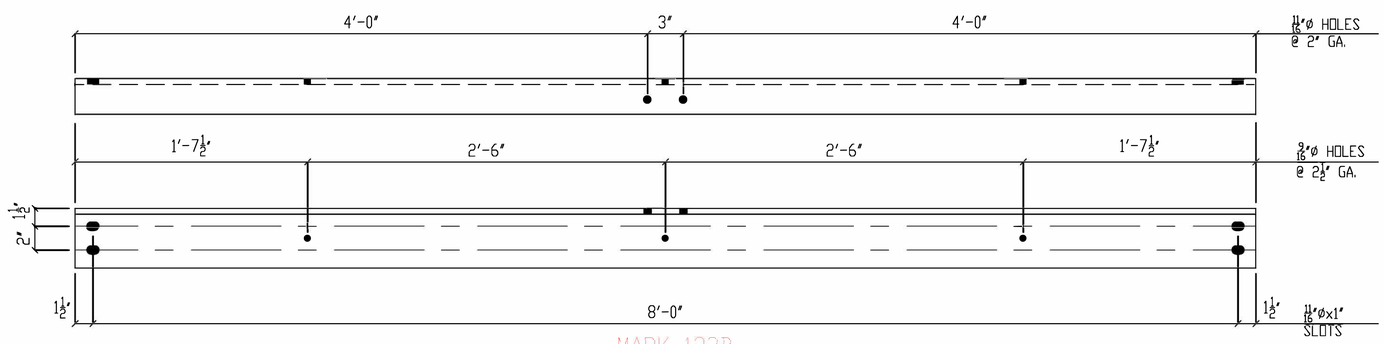

MARK 133B

L 5x3x1/2x 8'-3"
(SHIP LOOSE)

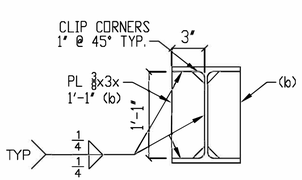

SECTION A-A

GALVANIZERS, INC.
RELEASED FOR CONSTRUCTION

DATE	SYM	REVISION RECORD	AUTH.	DR.	CK.

BLACK HILLS POWER INC.
WEST RAPID CITY SUBSTATION
P.O. NO: 5010015188
RAPID CITY, SD
SPEC. NO.: SANDMAN STRUCTURAL ENG.
REF. DWG.: 11-HSSD-133

GALVANIZERS, INC.

BLACK HILLS POWER

DRAWN BY	CHECKED BY
SLK	SLK
FILE NAME RCSD133	CHECK DATE: 1/2/19

TITLE: 2LS – 230KV SWITCH STAND (LOW)

DATE: 1/2/19

DRAWING NUMBER: 19-RCSD-133

P:\0#233\00\DWG\RECORD\WRC\CAD\WRC-C-411D.DWG

DGR ENGINEERING
ROCK RAPIDS, IOWA
(712) 472-2531

DATE	DRAWN BY	NO.	APPROVED BY	REVISION DESCRIPTION
06-20	KLV	1	PDK	CONFORMING TO CONSTRUCTION RECORDS
10-19	SMW	0	PDK	FOR CONSTRUCTION

BLACK HILLS ENERGY

WEST RAPID SUBSTATION

STEEL DETAILS
230 KV SWITCH STAND 2LS

DRAWN BY SMW DATE 10-19
APPROVED BY PDK DATE 10-19
DWG NO. WRC-C-411D SECTION 1 NO.

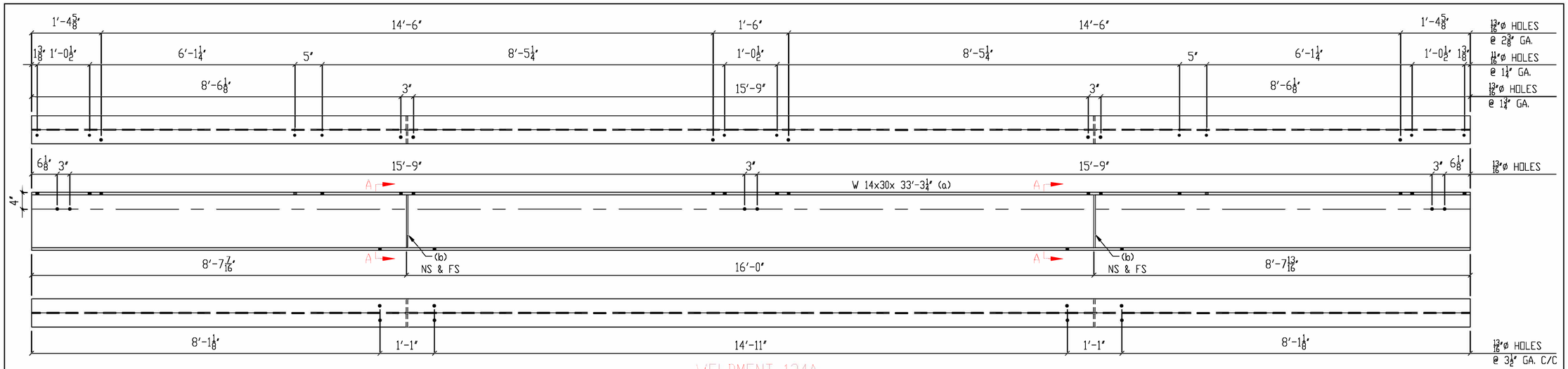

WELDMENT 134A

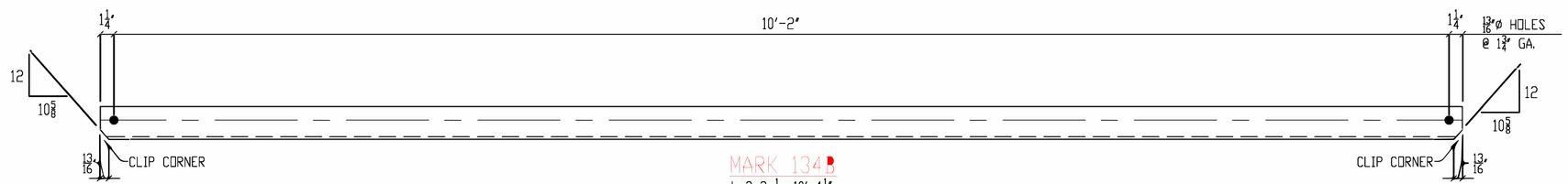

MARK 134B

L 3x3x1/4x 10'-4 1/2"
(SHIP LOOSE)

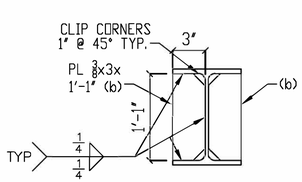

SECTION A-A

GALVANIZERS, INC.
RELEASED FOR CONSTRUCTION

DATE	SYM	REVISION RECORD	AUTH.	DR.	CK.

BLACK HILLS POWER INC.
WEST RAPID CITY SUBSTATION
P.O. NO: 5010015188
RAPID CITY, SD
SPEC. NO.: SANDMAN STRUCTURAL ENG.
REF. DWG.: 11-HSSD-134

GALVANIZERS, INC.

BLACK HILLS POWER

DRAWN BY	CHECKED BY
SLK	SLK
FILE NAME	CHECK DATE:
RCSD134	1/2/19

TITLE
2LS – 230KV SWITCH STAND (LOW)

DATE 1/2/19

DRAWING NUMBER 19-RCSD-134

P:\04233\00\DWG\RECORD\WRC\CAD\WRC-C-411E.DWG

DGR ENGINEERING
ROCK RAPIDS, IOWA
(712) 472-2531

DATE	DRAWN BY	NO.	APPROVED BY	REVISION DESCRIPTION
06-20	KLV	1	PDK	CONFORMING TO CONSTRUCTION RECORDS
10-19	SMW	0	PDK	FOR CONSTRUCTION

BLACK HILLS ENERGY

WEST RAPID SUBSTATION

STEEL DETAILS
230 KV SWITCH STAND 2LS

DRAWN BY	SMW	DATE	10-19
APPROVED BY	PDK	DATE	10-19

DWG NO. WRC-C-411E REVISION NO. 1

DATE	SYM	REVISION RECORD	AUTH.	DR.	CK.

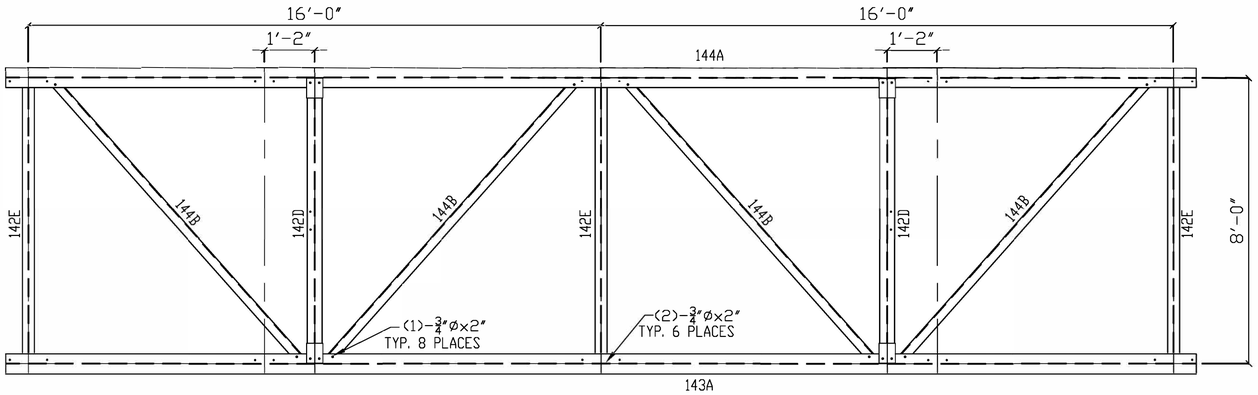

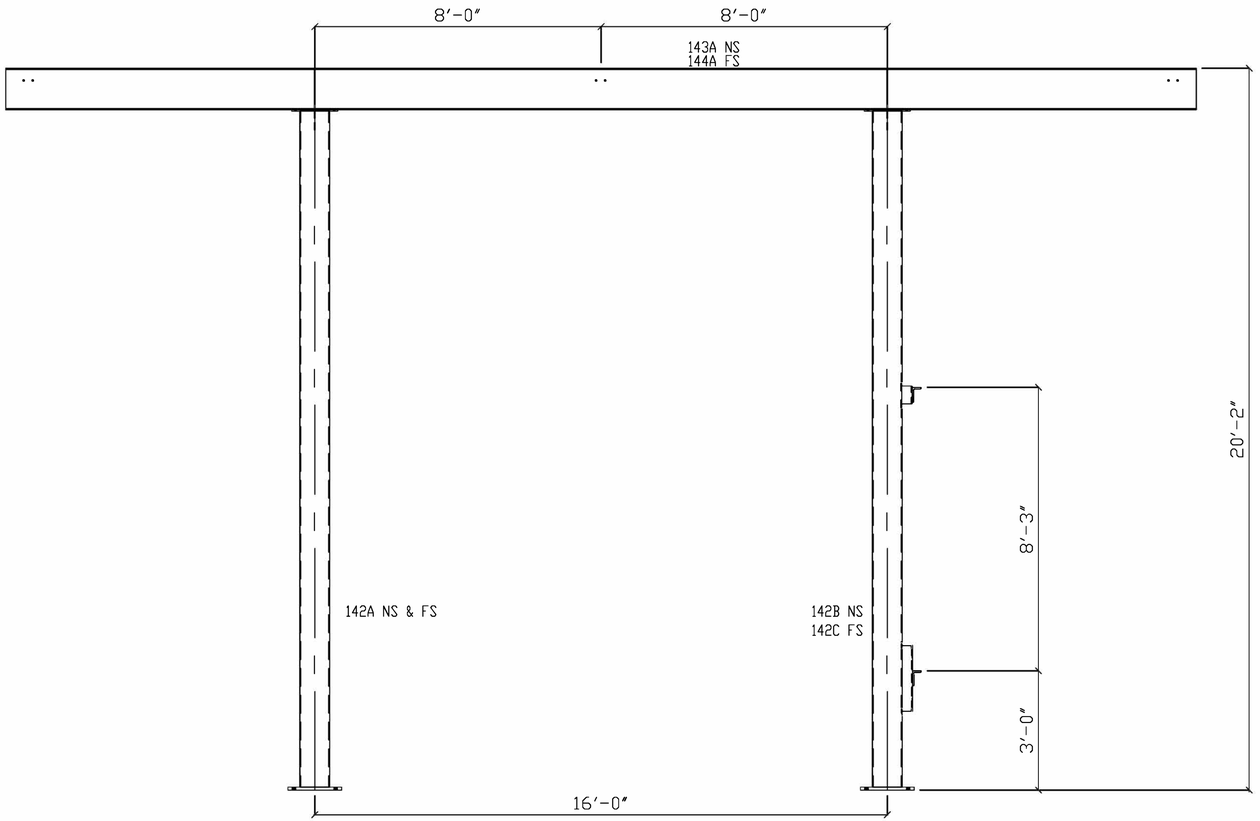

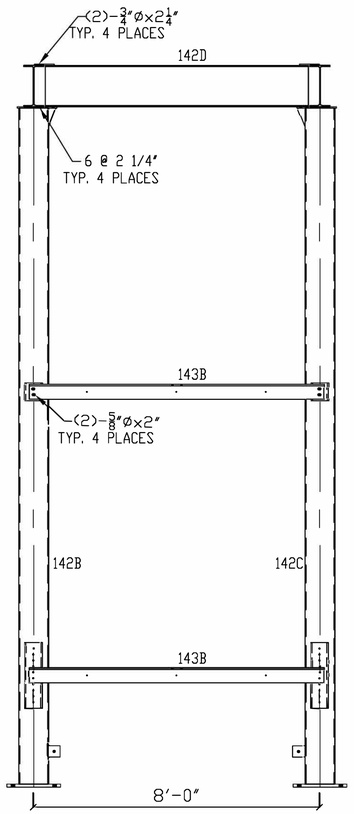

GALVANIZERS, INC.
RELEASED FOR CONSTRUCTION

BLACK HILLS POWER INC.
WEST RAPID CITY SUBSTATION
P.O. NO: 5010015188
RAPID CITY, SD
SPEC. NO.: SANDMAN STRUCTURAL ENG.
REF. DWG.: 11-HSSD-140

GALVANIZERS, INC.

BLACK HILLS POWER

DRAWN BY	CHECKED BY
SLK	SLK
FILE NAME	CHECK DATE:
RCSD140	1/2/19

TITLE
2HS – 230KV SWITCH STAND (HIGH)

DATE 1/2/19

DRAWING NUMBER **19-RCSD-140**

P:\042233\00\DWG\RECORD\WRC\CAD\WRC-C-412A.DWG

DGR ENGINEERING
ROCK RAPIDS, IOWA
(712) 472-2531

DATE	DRAWN BY	NO.	APPROVED BY	REVISION DESCRIPTION
06-20	KLV	1	PDK	CONFORMING TO CONSTRUCTION RECORDS
10-19	SMW	0	PDK	FOR CONSTRUCTION

BLACK HILLS ENERGY

WEST RAPID SUBSTATION

STEEL DETAILS
230 KV SWITCH STAND 2HS

DRAWN BY SMW DATE 10-19
APPROVED BY PDK DATE 10-19
DWG NO. WRC-C-412A REVISION 1

BILL OF MATERIAL

NO PCS	MATERIAL	LG FT	LG IN	MK	REMARK	TOTAL WT BLACK
2	WELDMENTS			142A		
2	HSS 10x10x5/16	18	10 7/8	142A		1525.8
2	PL 3/4x16 1/2	1	4 1/2	B142A		115.8
2	PL 1/2x13 1/4	1	3 1/2	C142A		58.2
1	PL 3/8x2 1/2	0	6 1/4	D142A		3.4
2	FB 1/4x3	0	3	K142A		1.4
1	WELDMENT			142B		
1	HSS 10x10x5/16	18	10 7/8	142B		762.9
1	PL 3/4x16 1/2	1	4 1/2	B142B		57.9
1	PL 1/2x13 1/4	1	3 1/2	C142B		29.1
1	PL 3/8x2 1/2	0	6 1/4	D142B		3.4
1	MC 6x18	0	6	F142B		9.0
1	MC 6x18	1	10	G142B		33.0
1	FB 1/4x3	0	3	K142B		0.7
1	WELDMENT			142C		
1	HSS 10x10x5/16	18	10 7/8	142C		762.9
1	PL 3/4x16 1/2	1	4 1/2	B142C		57.9
1	PL 1/2x13 1/4	1	3 1/2	C142C		29.1
1	PL 3/8x2 1/2	0	6 1/4	D142C		3.4
1	MC 6x18	0	6	F142C		9.0
1	MC 6x18	1	10	G142C		33.0
1	FB 1/4x3	0	3	K142C		0.7
2	WELDMENTS			142D		
2	W 14x22	7	4 1/4	142D		323.6
4	PL 1/2x5 1/2	0	6 5/8	B142D		20.8
3	WELDMENTS			142E		
3	W 8x10	7	10 3/4	142E		237.0
12	L 3x3x1/4	0	3	B142E		15.6
1	WELDMENT			143A		
1	W 14x30	33	3 1/4	143A		998.2
4	PL 3/8x3	1	1	B143A		16.8
2	L 5x3x1/2	8	3	143B	SHIP LOOSE	211.2

BILL OF MATERIAL

NO PCS	MATERIAL	LG FT	LG IN	MK	REMARK	TOTAL WT BLACK
1	WELDMENT			144A		
1	W 14x30	33	3 1/4	144A		998.2
4	PL 3/8x3	1	1	B144A		16.8
4	L 3x3x1/4	10	4 1/2	144B	SHIP LOOSE	203.6
	HARDWARE (+5%)					
21	MB 3/4	0	2		A325 BOLTS	14.3
34	MB 3/4	0	2 1/4		A325 BOLTS	23.8
55	HHN 3/4 NC				HVY HEX NUTS	
110	FW 3/4				HARDENED	
55	MFN 3/4				MF LOCKNUTS	4.9
9	MB 5/8	0	2		A325 BOLTS	4.0
9	HHN 5/8 NC				HVY HEX NUTS	
18	FW 5/8				HARDENED	
9	MFN 5/8				MF LOCKNUTS	0.3
					SUBTOTAL	6585.7
					3 1/2% GALV.	230.5
					TOTAL WEIGHT PER UNIT	6816.2

ONE REQUIRED
TOTAL WEIGHT = 6,816.2

NOTES:

1. FOR ERECTION DRAWINGS SEE SHEET 140
2. FOR DETAIL DRAWINGS SEE SHEETS 142-144
3. ALL TUBE - ASTM A500, GR. B
4. ALL PL 1/2" & THICKER - GR 50 UNO ALL OTHER PL & SHAPES - A36 UNO
5. ALL HOLES AS NOTED
6. GALV. AFTER FABRICATION PER ASTM A123
7. START & STOP WELDS @ ℄ OF TUBES & OCTAGONS.

GALVANIZERS, INC.
RELEASED FOR CONSTRUCTION

DATE	SYM	REVISION RECORD	AUTH.	DR.	CK.

BLACK HILLS POWER INC.
WEST RAPID CITY SUBSTATION
P.O. NO: 5010015188
RAPID CITY, SD
SPEC. NO.: SANDMAN STRUCTURAL ENG.
REF. DWG.: 11-HSSD-141

GALVANIZERS, INC.

BLACK HILLS POWER

DRAWN BY	CHECKED BY
SLK	SLK
FILE NAME RCSD141	CHECK DATE: 1/2/19

TITLE
2HS - 230KV SWITCH STAND (HIGH)

DATE 1/2/19

DRAWING NUMBER
19-RCSD-141

DATE	DRAWN BY	NO.	APPROVED BY	REVISION DESCRIPTION
06-20	KLV	1	PDK	CONFORMING TO CONSTRUCTION RECORDS
10-19	SMW	0	PDK	FOR CONSTRUCTION

BLACK HILLS ENERGY

WEST RAPID SUBSTATION

STEEL DETAILS
230 KV SWITCH STAND 2HS

DRAWN BY SMW DATE 10-19
APPROVED BY PDK DATE 10-19
DWG NO. WRC-C-412B REVISION 1

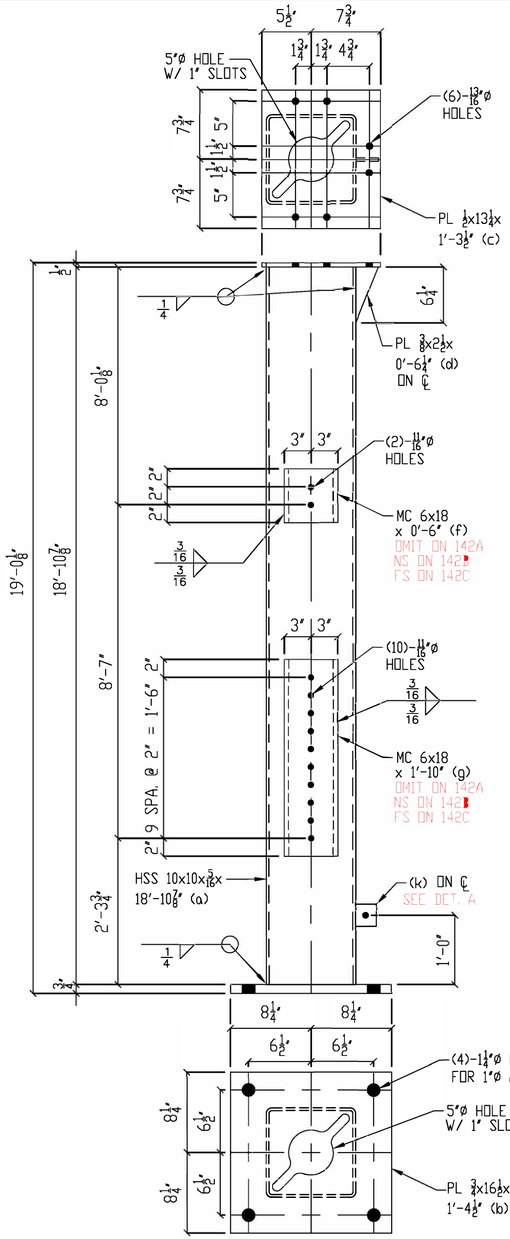

WELDMENT 142A AS NOTED
WELDMENT 142B AS NOTED
WELDMENT 142C AS NOTED

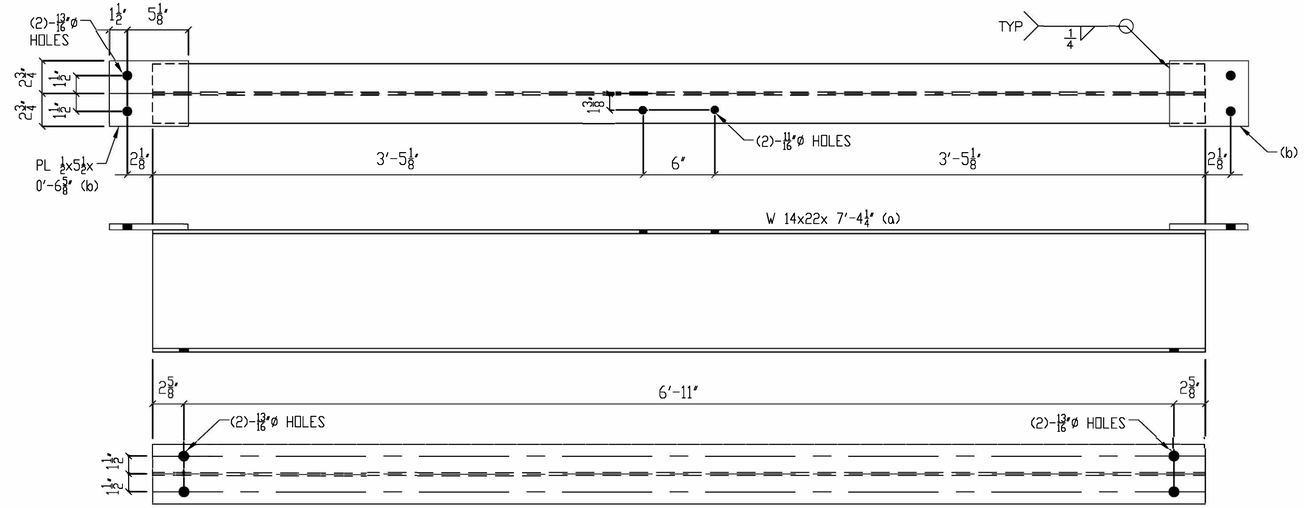

WELDMENT 142D

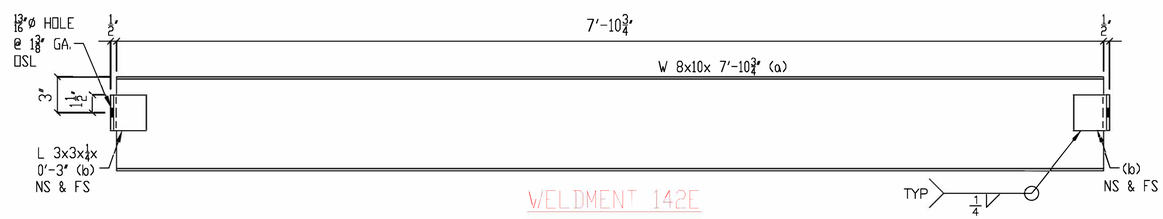

WELDMENT 142E

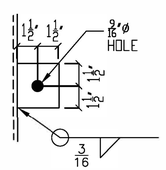

DETAIL A

FB 1/4x3x 0'-3" (k)

NOTE:
START AND STOP WELDS ON
CENTER LINE OF TUBE

GALVANIZERS, INC.
RELEASED FOR CONSTRUCTION

DATE	SYM	REVISION RECORD	AUTH.	DR.	CK.

BLACK HILLS POWER INC.
WEST RAPID CITY SUBSTATION
P.O. NO: 5010015188
RAPID CITY, SD
SPEC. NO.: SANDMAN STRUCTURAL ENG.
REF. DWG.: 11-HSSD-142

GALVANIZERS, INC.

BLACK HILLS POWER

DRAWN BY	CHECKED BY
SLK	SLK
FILE NAME RCSD142	CHECK DATE: 1/2/19

TITLE
2HS - 230KV SWITCH STAND (HIGH)

DATE 1/2/19

DRAWING NUMBER
19-RCSD-142

P:\0402310\DWG\RECORD\WRC\CAD\WRC-C-412C.DWG

DGR ENGINEERING
ROCK RAPIDS, IOWA
(712) 472-2531

DATE	DRAWN BY	NO.	APPROVED BY	REVISION DESCRIPTION
06-20	KLV	1	PDK	CONFORMING TO CONSTRUCTION RECORDS
10-19	SMW	0	PDK	FOR CONSTRUCTION

BLACK HILLS ENERGY
WEST RAPID SUBSTATION
STEEL DETAILS
230 KV SWITCH STAND 2HS

DRAWN BY SMW DATE 10-19
APPROVED BY PDK DATE 10-19
DWG NO. WRC-C-412C REVISION 1

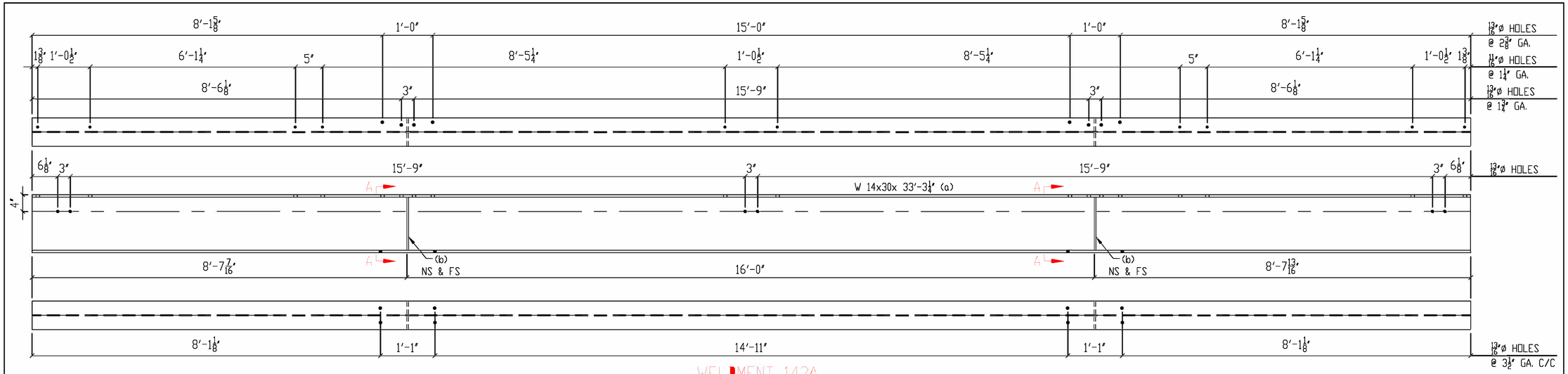

WELDMENT 143A

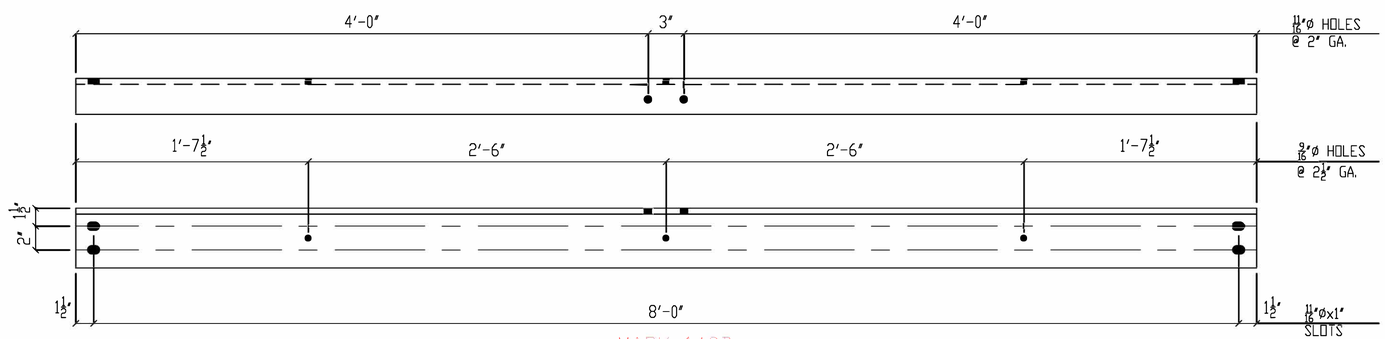

MARK 143B

L 5x3x1/2x 8′-3″
(SHIP LOOSE)

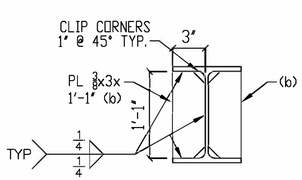

SECTION A-A

GALVANIZERS, INC.
RELEASED FOR CONSTRUCTION

DATE	SYM	REVISION RECORD	AUTH.	DR.	CK.

BLACK HILLS POWER INC.
WEST RAPID CITY SUBSTATION
P.O. NO: 5010015188
RAPID CITY, SD
SPEC. NO.: SANDMAN STRUCTURAL ENG.
REF. DWG.: 11-HSSD-143

GALVANIZERS, INC.

BLACK HILLS POWER

DRAWN BY	CHECKED BY
SLK	SLK
FILE NAME	CHECK DATE:
RCSD143	1/2/19

TITLE
2HS – 230KV SWITCH STAND (HIGH)

DATE 1/2/19

DRAWING NUMBER
19-RCSD-143

P:\04\233\00\DWG\RECORD\WRC\CAD\WRC-C-412D.DWG

DGR ENGINEERING
ROCK RAPIDS, IOWA
(712) 472-2531

DATE	DRAWN BY	NO.	APPROVED BY	REVISION DESCRIPTION
06-20	KLV	1	PDK	CONFORMING TO CONSTRUCTION RECORDS
10-19	SMW	0	PDK	FOR CONSTRUCTION

BLACK HILLS ENERGY
WEST RAPID SUBSTATION
STEEL DETAILS
230 KV SWITCH STAND 2HS

DRAWN BY SMW DATE 10-19
APPROVED BY PDK DATE 10-19
DWG NO. WRC-C-412D REVISION 1

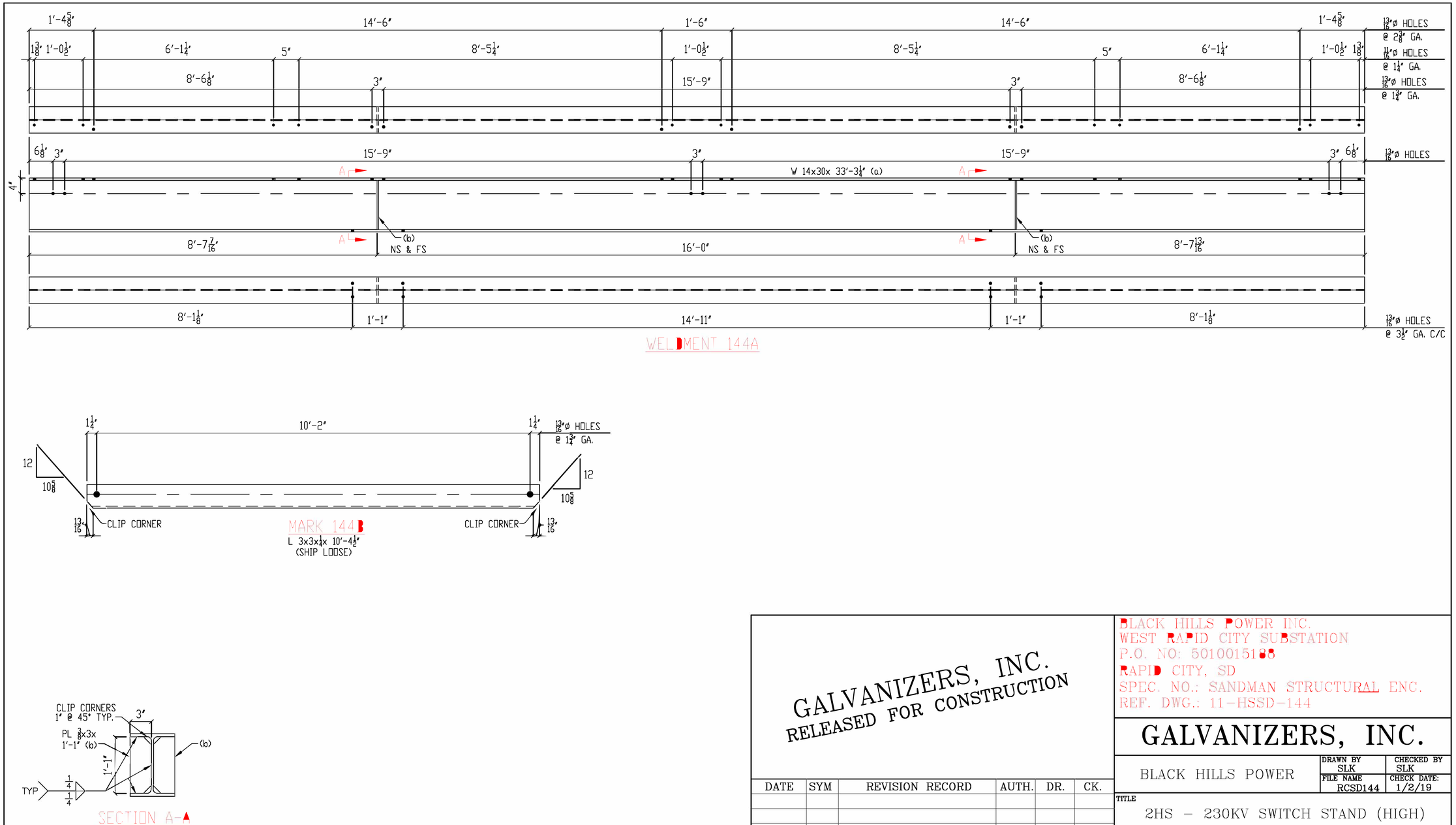

GALVANIZERS, INC.
RELEASED FOR CONSTRUCTION

DATE	SYM	REVISION RECORD	AUTH.	DR.	CK.

BLACK HILLS POWER INC.
WEST RAPID CITY SUBSTATION
P.O. NO: 5010015188
RAPID CITY, SD
SPEC. NO.: SANDMAN STRUCTURAL ENG.
REF. DWG.: 11-HSSD-144

GALVANIZERS, INC.

BLACK HILLS POWER

DRAWN BY	CHECKED BY
SLK	SLK
FILE NAME RCSD144	CHECK DATE: 1/2/19

TITLE
2HS – 230KV SWITCH STAND (HIGH)

DATE 1/2/19

DRAWING NUMBER 19-RCSD-144

P:\04233\00\DWG\RECORD\WRC\CAD\WRC-C-412E.DWG

DGR ENGINEERING
ROCK RAPIDS, IOWA
(712) 472-2531

DATE	BRAWN BY	NO.	APPROVED BY	REVISION DESCRIPTION
06-20	KLV	1	PDK	CONFORMING TO CONSTRUCTION RECORDS
10-19	SMW	0	PDK	FOR CONSTRUCTION

BLACK HILLS ENERGY
WEST RAPID SUBSTATION
STEEL DETAILS
230 KV SWITCH STAND 2HS

DRAWN BY	SMW	DATE	10-19
APPROVED BY	PDK	DATE	10-19

DWG NO. WRC-C-412E REVISION 1 NO.

DATE	SYM	REVISION RECORD	AUTH.	DR.	CK.

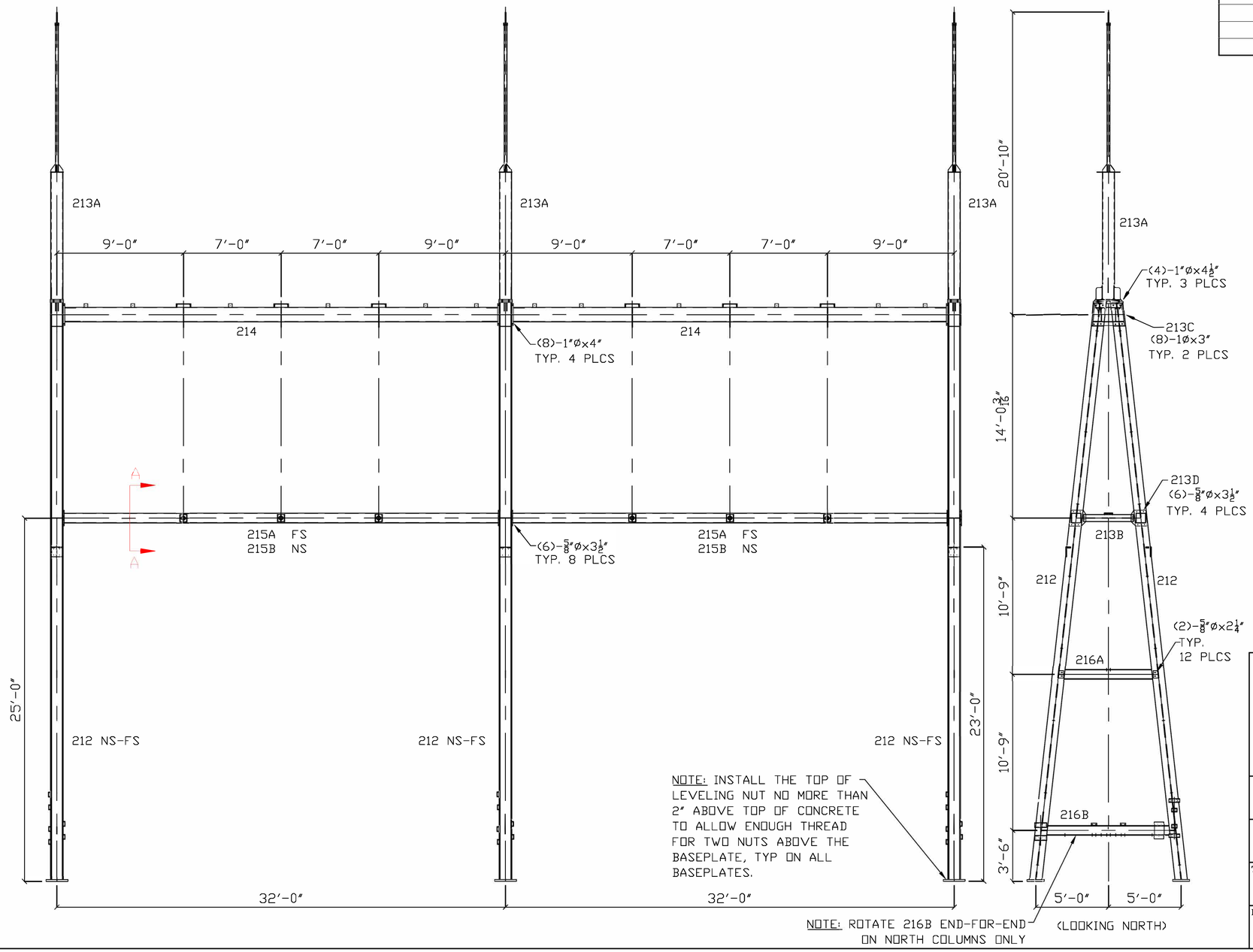

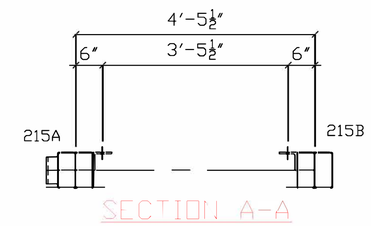

BLACK HILLS POWER INC.
WEST RAPID CITY SUBSTATION
P.O. NO: 5010015188
RAPID CITY, SD
SPEC. NO.: SANDMAN STRUCTURAL ENG.
REF. DWG.: 11-HSSD-210

GALVANIZERS, INC.

BLACK HILLS POWER	DRAWN BY GAL	CHECKED BY SLK
	FILE NAME RCSD210	CHECK DATE: 1/2/19

TITLE: 2-BAY A-FRAME (LAF)

DATE: 1/2/19

DRAWING NUMBER: 19-RCSD-210

STRUCTURE DESIGN LOADINGS (FULL TENSION WITH ANGLE) FOR 1272kcm 45/7 ACSR "BITTERN", 3/8" HS STATIC, AND 48F OPGW.
NESC HEAVY ½" ICE 4PSF WIND, 0°F, OLF = 1.5, 2.5, 1.65 (VERT, WIND, TENSION)
EXTREME WIND 20PSF, 60°F, OLF = 1.15(ALL LOADS)
WIND SPAN = 125FT
WEIGHT SPAN = 125FT
TAKEOFF ANGLE = 15 DEGREES (HORIZONTAL)
= 25 DEGREES (VERTICAL)
DESIGN TENSION FOR 125FT RULING SPAN UNDER NESC HEAVY (WITHOUT OLFs):
1272 ACSR = 3000 LBS
⅜ HS STATIC = 2000 LBS
48F OPGW = 2000 LBS

DATE	DRAWN BY	NO.	APPROVED BY	REVISION DESCRIPTION
06-20	KLV	1	PDK	CONFORMING TO CONSTRUCTION RECORDS
10-19	SMW	0	PDK	FOR CONSTRUCTION

BLACK HILLS ENERGY

WEST RAPID SUBSTATION

STEEL DETAILS
69 KV A-FRAME LAF

DRAWN BY SMW DATE 10-19
APPROVED BY PDK DATE 10-19
DWG NO. WRC-C-416A SCHEDULE NO. 1

DGR ENGINEERING
ROCK RAPIDS, IOWA
(712) 472-2531

P:\04233\00\DWG\RECORD\WRC\CAD\WRC-C-416A.DWG

BILL OF MATERIAL

NO PCS	MATERIAL	LG FT	LG IN	MK	REMARK	TOTAL WT BLACK
6	WELDMENTS			212		
6	W 10x68	40	0 3/4	212		16345.5
6	PL 1 1/2x14	1	7	B212		679.8
6	PL 1 1/4x11	0	11	C212		258.0
6	L 8x4x1/2	0	8 3/4	D212		85.8
12	PL 3/8x4 3/4	0	8 3/4	F212		54.0
12	PL 3/8x4 3/4	0	7 1/4	G212		44.4
6	C 4x5.4	0	10	J212		27.0
6	C 4x5.4	0	10	P212		27.0
12	C 4x5.4	0	6	R212		32.4
12	PL 1/2x4 5/16	0	6	S212		44.0
12	C 4x5.4	1	0	T212		64.8
3	WELDMENTS			213A		
3	HSS 10x10x1/4	8	9 1/8	213A		857.6
3	PL 1 1/4x11	1	10	B213A		257.7
3	PL 3/8x10 3/4	1	7 1/4	C213A		66.0
3	PI 2 SCH 40	10	0	D213A	W/CAP	109.5
12	PL 3/8x3 3/4	0	6	F213A		28.8
3	RB 3/4	0	9	G213A	SHARPEN TIP	3.6
12	PL 1/2x5	0	10	H213A		85.2
12	FB 1/4x3	0	3	K213A		8.4
3	WELDMENTS			213B		
3	W10x26	3	5 1/2	213B		269.8
3	PL 3/8x9	1	1 1/2	B213B	BENT	38.8
2	PL 3/8x18 1/4	2	2 3/8	213C	SHIP LOOSE	102.3
4	PL 3/4x13	1	1 5/8	213D	SHIP LOOSE	150.6
2	WELDMENTS			214		
2	HSS 12x12x5/8	30	11	214		5771.6
4	PL 1 1/4x18 1/4	2	2 3/8	B214		683.2
18	PL 1/2x4 1/2	1	0	C214		138.6
6	C 12x20.7	1	0 1/2	D214		129.6
8	PL 1/2x4 1/2	0	9	F214		46.4
8	PL 1/2x6 3/8	1	0 3/4	G214		92.8
12	FB 1/4x3	0	3	K214		8.4

BILL OF MATERIAL

NO PCS	MATERIAL	LG FT	LG IN	MK	REMARK	TOTAL WT BLACK
2	WELDMENTS			215A		
2	HSS 8x8x3/16	31	0	215A		1217.0
4	PL 3/4x13	1	1 5/8	B215A		150.6
6	MC 6x12	0	6	C215A		36.0
6	L4x4x3/8	0	8 3/4	D215A		1 43.2
2	WELDMENTS			215B		
2	HSS 8x8x3/16	31	0	215B		1217.0
4	PL 3/4x13	1	1 5/8	B215B		150.6
6	L4x4x3/8	0	8 3/4	D215B		1 43.2
3	W8x24	6	8	216A	SHIP LOOSE	480.0
3	WELDMENTS			216B		
3	W8x31	9	0 5/8	216B		841.9
3	PL 3/8x8	1	2	B216B		35.7
6	L 2x2x3/16	0	4 1/2	C216B		5.5
	HARDWARE (+5%)					
13	MB 1	0	4 1/2		A325 BOLTS	23.7
34	MB 1	0	4		A325 BOLTS	58.3
17	MB 1	0	3		A325 BOLTS	25.5
64	HHN 1	0			HVY HX NUT	
128	FW 1	0			HARDENED	
64	LW 1				LOCKWASHER	5.8

BILL OF MATERIAL

NO PCS	MATERIAL	LG FT	LG IN	MK	REMARK	TOTAL WT BLACK
76	MB 5/8	0	3 1/2		A325 BOLTS	41.0
26	MB 5/8	0	2 1/4		A325 BOLTS	11.3
102	HHN 5/8				HVY HEX NUTS	
204	FW 5/8				HARDENED	
102	MFN 5/8				MF LOCKNUTS	4.0
					TOTAL BLK. WT.	1 30902.3
					GALV. 3 1/2%	1 1081.6
					TOTAL WEIGHT PER UNIT	1 31983.9

2 REQUIRED
TOTAL WEIGHT = 63,967.8
1

NOTES:

1. FOR ERECTION DRAWINGS SEE SHEET 210
2. FOR DETAIL DRAWINGS SEE SHEETS 212-216
3. ALL TUBE - ASTM A500, GR. B
4. ALL W-SHAPES - ASTM A992 GR 50
5. ALL PL 1/2" & THICKER - GR 50 UNO ALL OTHER PL & SHAPES - A36 UNO
6. ALL HOLES AS NOTED
7. GALV. AFTER FABRICATION PER ASTM A123
8. START & STOP WELDS @ ℄ OF TUBES & OCTAGONS.

GALVANIZERS, INC.
RELEASED FOR CONSTRUCTION

DATE	SYM	REVISION RECORD	AUTH.	DR.	CK.
1/23/19	1	AS PER APPROVAL		SLK	
		SWITCH MTG ANGLE			

BLACK HILLS POWER INC.
WEST RAPID CITY SUBSTATION
P.O. NO: 5010015188
RAPID CITY, SD
SPEC. NO.: SANDMAN STRUCTURAL ENG.
REF. DWG.: 11-HSSD-211

GALVANIZERS, INC.

BLACK HILLS POWER

DRAWN BY	CHECKED BY
GAL	SLK
FILE NAME RCSD211	CHECK DATE: 1/2/19

TITLE: 2-BAY A-FRAME (LAF)

DATE: 1/2/19

DRAWING NUMBER: 19-RCSD-211

DATE	DRAWN BY	NO.	APPROVED BY	REVISION DESCRIPTION
06-20	KLV	1	PDK	CONFORMING TO CONSTRUCTION RECORDS
10-19	SMW	0	PDK	FOR CONSTRUCTION

BLACK HILLS ENERGY

WEST RAPID SUBSTATION

STEEL DETAILS
69 KV A-FRAME LAF

DRAWN BY SMW DATE 10-19
APPROVED BY PDK DATE 10-19

DWG NO. WRC-C-416B REVISED 1 REV.

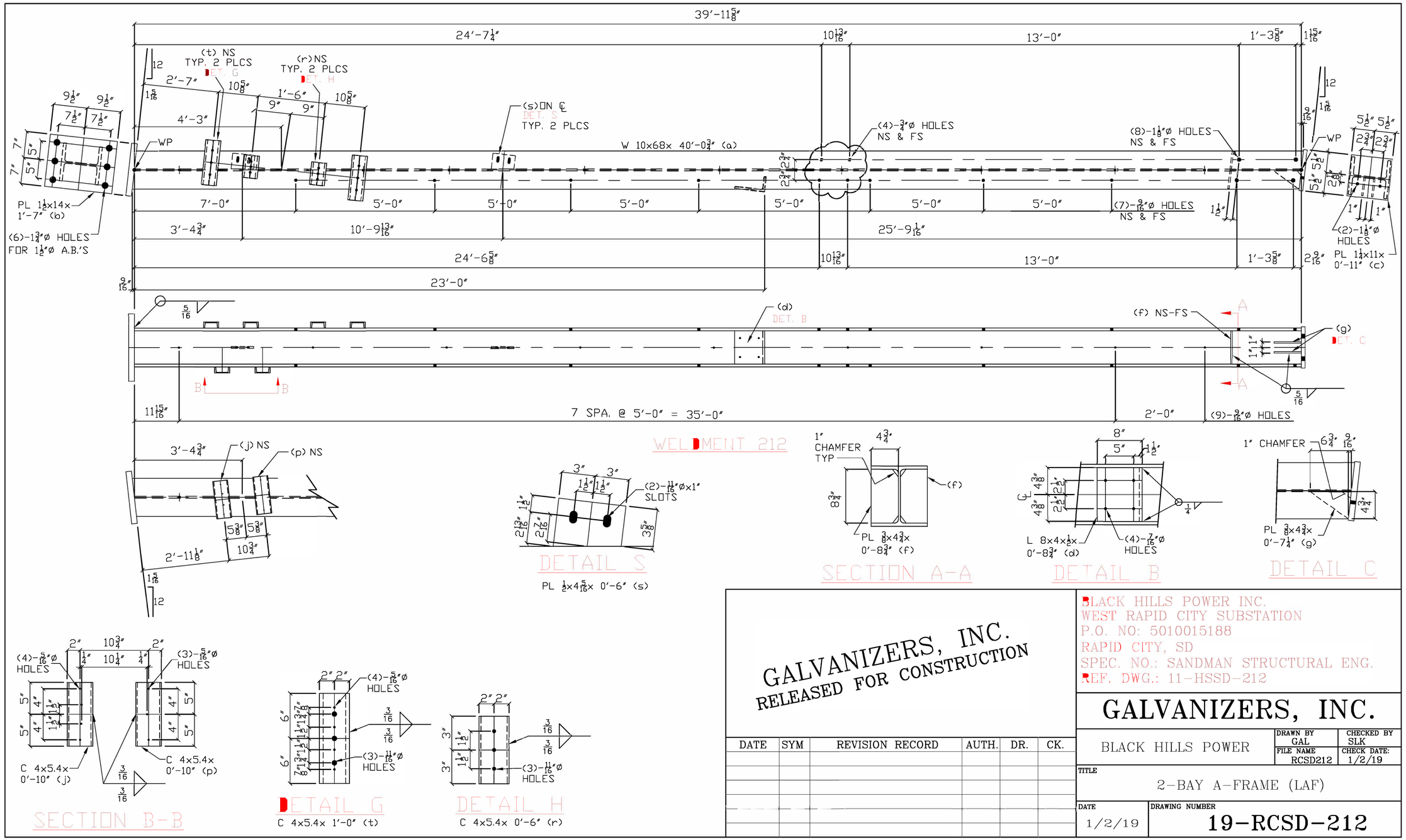

GALVANIZERS, INC.
RELEASED FOR CONSTRUCTION

DATE	SYM	REVISION RECORD	AUTH.	DR.	CK.

BLACK HILLS POWER INC.
WEST RAPID CITY SUBSTATION
P.O. NO: 5010015188
RAPID CITY, SD
SPEC. NO.: SANDMAN STRUCTURAL ENG.
REF. DWG.: 11-HSSD-212

GALVANIZERS, INC.

BLACK HILLS POWER

DRAWN BY	CHECKED BY
GAL	SLK
FILE NAME RCSD212	CHECK DATE: 1/2/19

TITLE: 2-BAY A-FRAME (LAF)

DATE: 1/2/19

DRAWING NUMBER: 19-RCSD-212

P:\04233\00\DWG\RECORD\WRC\CAD\WRC-C-416C.DWG

DGR ENGINEERING
ROCK RAPIDS, IOWA
(712) 472-2531

DATE	DRAWN BY	NO.	APPROVED BY	REVISION DESCRIPTION
06-20	KLV	1	PDK	CONFORMING TO CONSTRUCTION RECORDS
10-19	SMW	0	PDK	FOR CONSTRUCTION

BLACK HILLS ENERGY
WEST RAPID SUBSTATION
STEEL DETAILS
69 KV A-FRAME LAF

DRAWN BY SMW DATE 10-19
APPROVED BY PDK DATE 10-19
DWG NO. WRC-C-416C REVISION 1

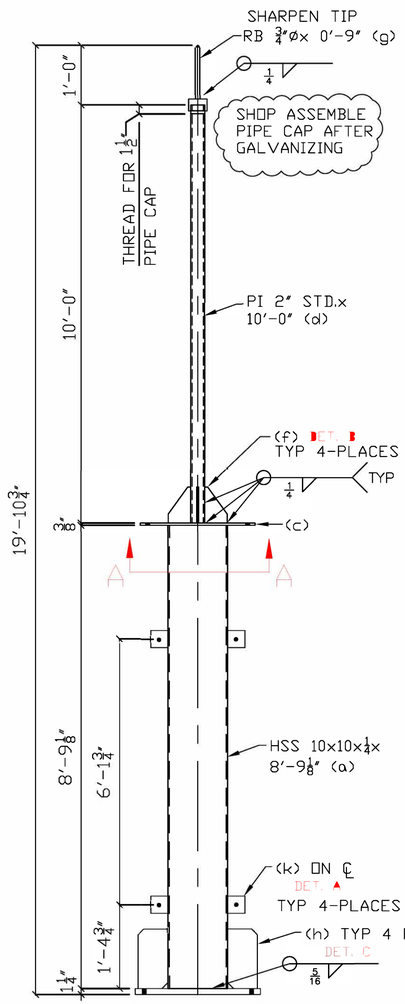

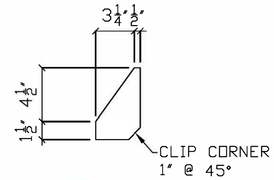

DETAIL B

PL 3/8×3 3/4× 0'-6" (f)

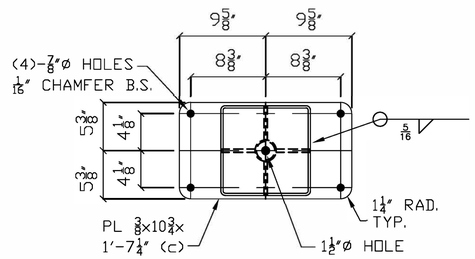

SECTION A-A

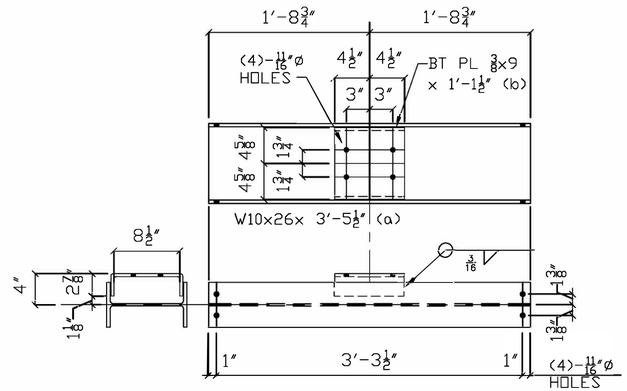

WELDMENT 213B

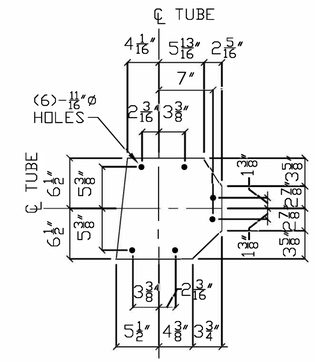

MARK 213D

PL 3/4x13x 1'-1 5/8"

SHIP LOOSE

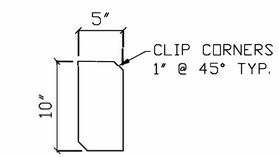

DETAIL C

PL 1/2x5x 0'-10" (h)

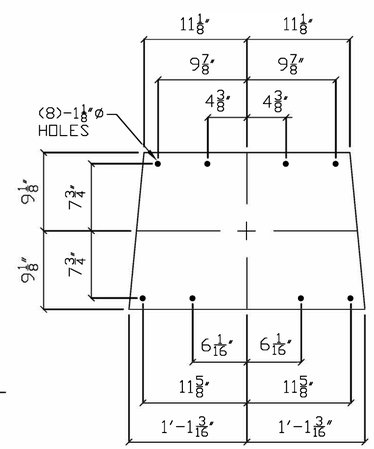

MARK 213C

PL 3/8×18 1/4× 2'-2 3/8"

SHIP LOOSE

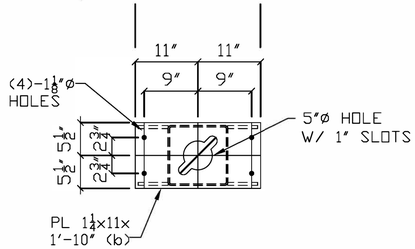

WELDMENT 213A

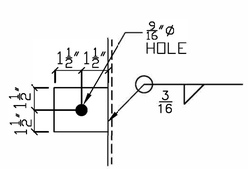

DETAIL A

FB 1/4x3x 0'-3" (k)

NOTE:
START AND STOP WELDS ON CENTER LINE OF TUBE

GALVANIZERS, INC.
RELEASED FOR CONSTRUCTION

DATE	SYM	REVISION RECORD	AUTH.	DR.	CK.

BLACK HILLS POWER INC.
WEST RAPID CITY SUBSTATION
P.O. NO: 5010015188
RAPID CITY, SD
SPEC. NO.: SANDMAN STRUCTURAL ENG.
REF. DWG.: 11-HSSD-213

GALVANIZERS, INC.

BLACK HILLS POWER

DRAWN BY	CHECKED BY
GAL	SLK
FILE NAME RCSD213	CHECK DATE: 1/2/19

TITLE: 2-BAY A-FRAME (LAF)

DATE: 1/2/19

DRAWING NUMBER: 19-RCSD-213

P:\04233\00\DWG\RECORD\WRC\CAD\WRC-C-416D.DWG

DGR ENGINEERING
ROCK RAPIDS, IOWA
(712) 472-2531

DATE	DRAWN BY	NO.	APPROVED BY	REVISION DESCRIPTION
06-20	KLV	1	PDK	CONFORMING TO CONSTRUCTION RECORDS
10-19	SMW	0	PDK	FOR CONSTRUCTION

BLACK HILLS ENERGY
WEST RAPID SUBSTATION
STEEL DETAILS
69 KV A-FRAME LAF

DRAWN BY SMW DATE 10-19
APPROVED BY PDK DATE 10-19
DWG NO. WRC-C-416D REVISION NO. 1

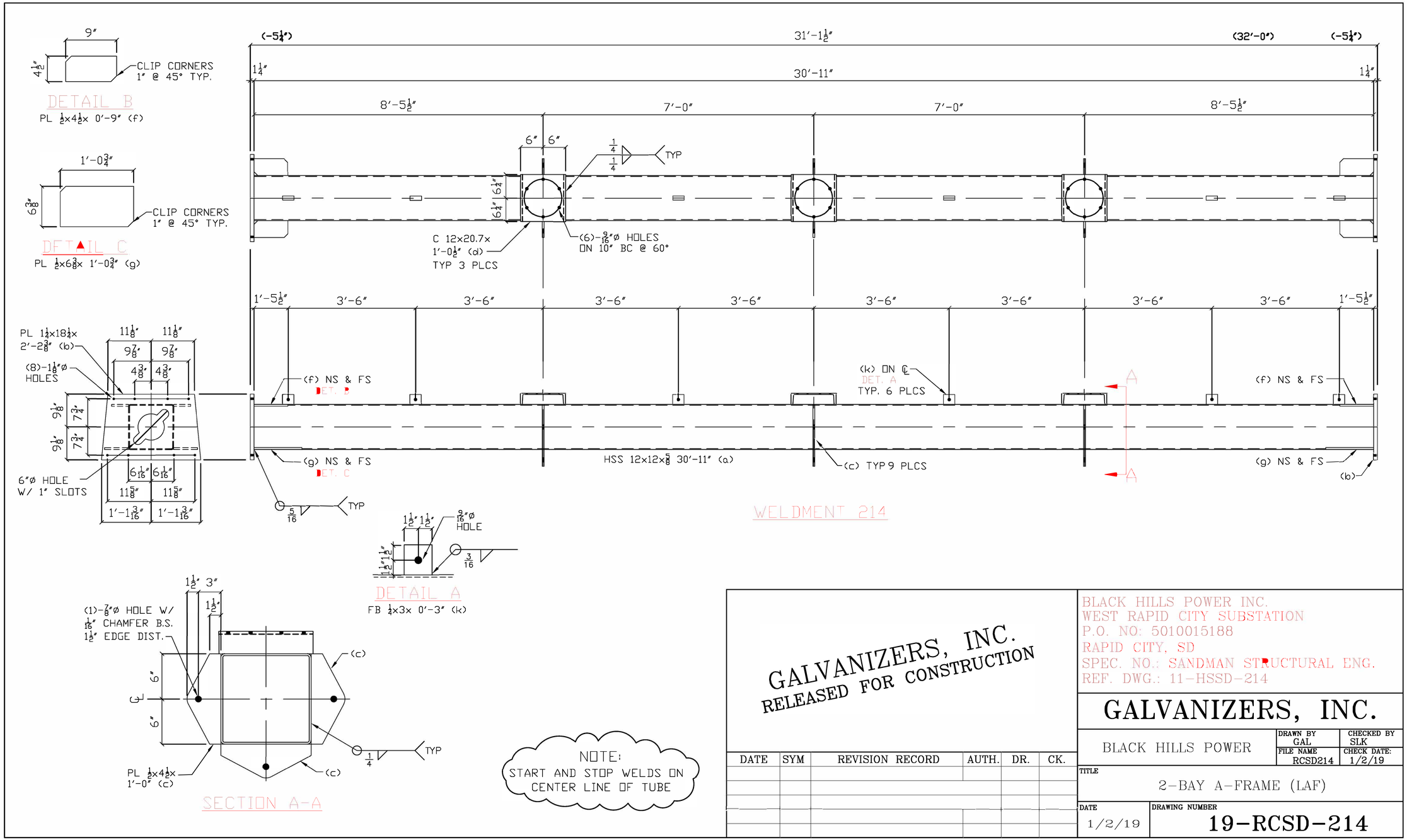

P:\04233\00\DWG\RECORD\WRC\CAD\WRC-C-416E.DWG

DGR ENGINEERING
ROCK RAPIDS, IOWA
(712) 472-2531

DATE	DRAWN BY	NO.	APPROVED BY	REVISION DESCRIPTION
06-20	KLV	1	PDK	CONFORMING TO CONSTRUCTION RECORDS
10-19	SMW	0	PDK	FOR CONSTRUCTION

BLACK HILLS ENERGY
WEST RAPID SUBSTATION
STEEL DETAILS
69 KV A-FRAME LAF

DRAWN BY SMW DATE 10-19
APPROVED BY PDK DATE 10-19
DWG NO. WRC-C-416E REVISION 1

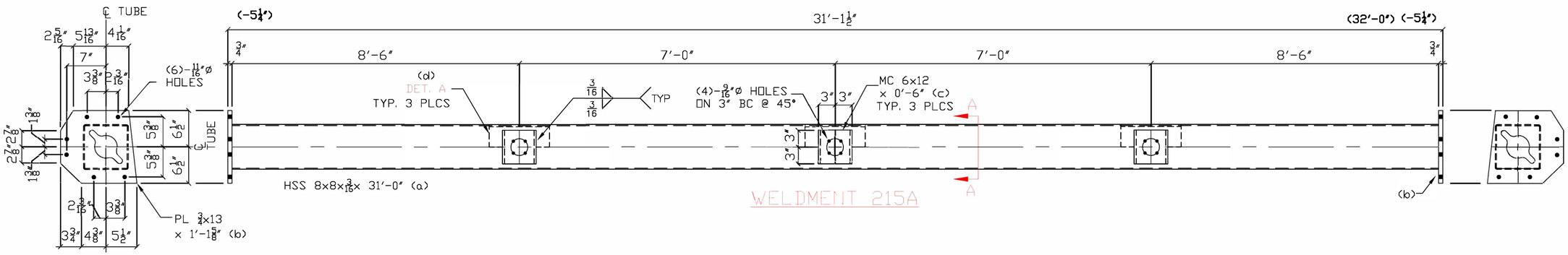

WELDMENT 215A

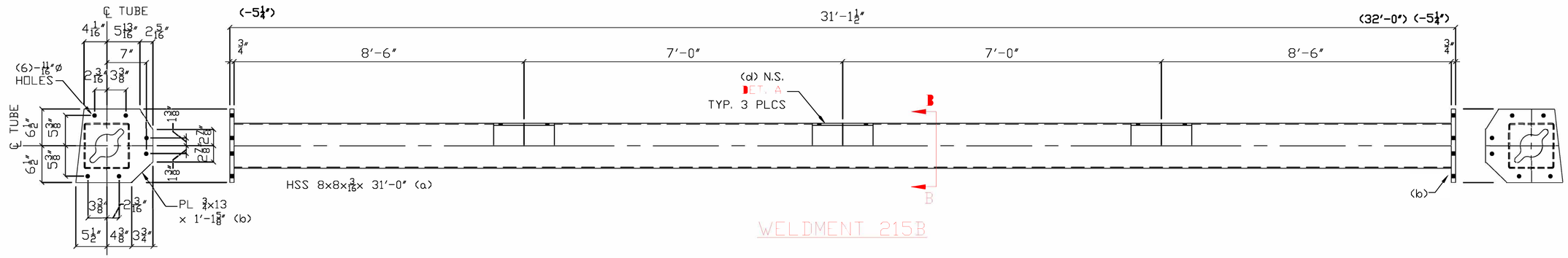

WELDMENT 215B

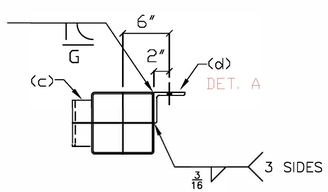

SECTION A-A

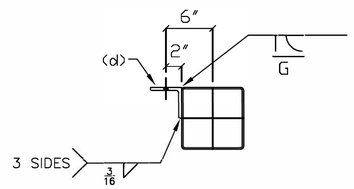

SECTION B-B

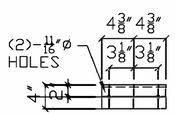

DETAIL A

L 4x4x3/8x 0'-8¾" (d) 1

NOTE:
START AND STOP WELDS ON CENTER LINE OF TUBE

GALVANIZERS, INC.
RELEASED FOR CONSTRUCTION

DATE	SYM	REVISION RECORD	AUTH.	DR.	CK.
1/23/19	1	AS PER APPROVAL		SLK	
		SWITCH MTG			

BLACK HILLS POWER INC.
WEST RAPID CITY SUBSTATION
P.O. NO: 5010015188
RAPID CITY, SD
SPEC. NO.: SANDMAN STRUCTURAL ENG.
REF. DWG.: 11-HSSD-214

GALVANIZERS, INC.

BLACK HILLS POWER

DRAWN BY	CHECKED BY
GAL	SLK
FILE NAME	CHECK DATE:
RCSD215	1/2/19

TITLE: 2-BAY A-FRAME (LAF)

DATE: 1/2/19

DRAWING NUMBER: 19-RCSD-215

P:\04233\00\DWG\RECORD\WRCC\CAD\WRC-C-416F.DWG

DGR ENGINEERING
ROCK RAPIDS, IOWA
(712) 472-2531

DATE	DRAWN BY	NO.	APPROVED BY	REVISION DESCRIPTION
06-20	KLV	1	PDK	CONFORMING TO CONSTRUCTION RECORDS
10-19	SMW	0	PDK	FOR CONSTRUCTION

BLACK HILLS ENERGY

WEST RAPID SUBSTATION

STEEL DETAILS
69 KV A-FRAME LAF

DRAWN BY SMW DATE 10-19
APPROVED BY PDK DATE 10-19
DWG NO. WRC-C-416F
REVISION NO. 1

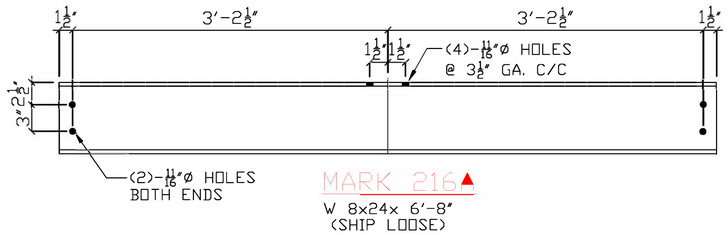

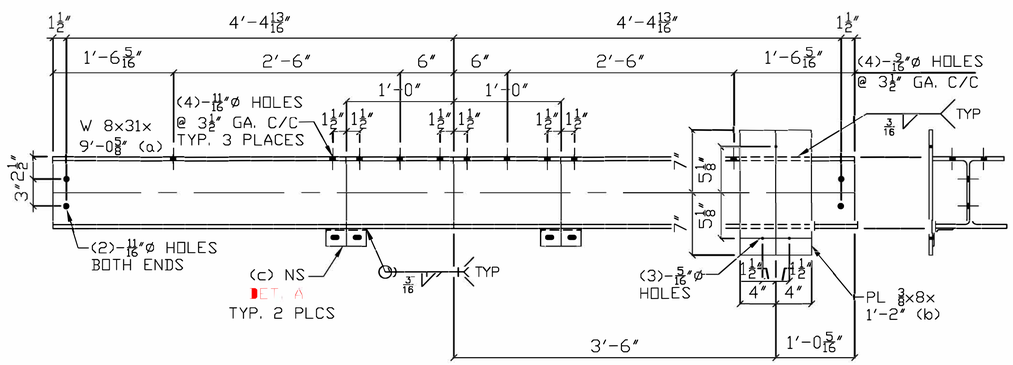

WELDMENT 216B

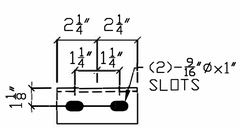

DETAIL A
L 2x2x3/16x 0'-4 1/2" (c)

NOTE:
START AND STOP WELDS ON
CENTER LINE OF TUBE

GALVANIZERS, INC.
RELEASED FOR CONSTRUCTION

DATE	SYM	REVISION RECORD	AUTH.	DR.	CK.

BLACK HILLS POWER INC.
WEST RAPID CITY SUBSTATION
P.O. NO: 5010015188
RAPID CITY, SD
SPEC. NO.: SANDMAN STRUCTURAL ENG.
REF. DWG.: 11-HSSD-214

GALVANIZERS, INC.

BLACK HILLS POWER

DRAWN BY	CHECKED BY
GAL	SLK
FILE NAME RCSD216	CHECK DATE: 1/2/19

TITLE
2-BAY A-FRAME (LAF)

DATE 1/2/19

DRAWING NUMBER
19-RCSD-216

P:\042233\00\DWG\RECORD\WRC\CAD\WRC-C-416G.DWG

DGR ENGINEERING
ROCK RAPIDS, IOWA
(712) 472-2531

DATE	DRAWN BY	NO.	APPROVED BY	REVISION DESCRIPTION
06-20	KLV	1	PDK	CONFORMING TO CONSTRUCTION RECORDS
10-19	SMW	0	PDK	FOR CONSTRUCTION

BLACK HILLS ENERGY
WEST RAPID SUBSTATION
STEEL DETAILS
69 KV A-FRAME LAF

DRAWN BY SMW DATE 10-19
APPROVED BY PDK DATE 10-19
DWG NO. WRC-C-416G SCALE NONE REV 1

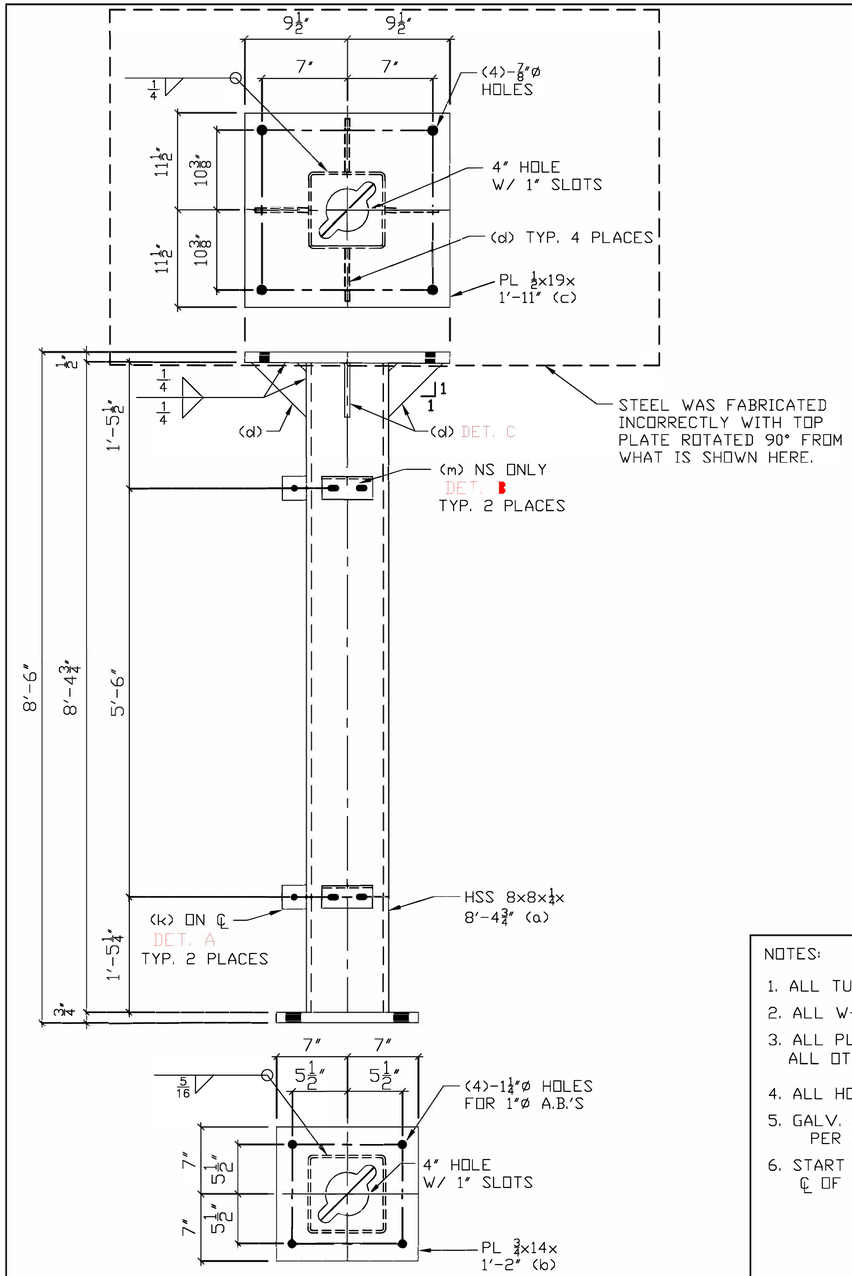

WELDMENT 220

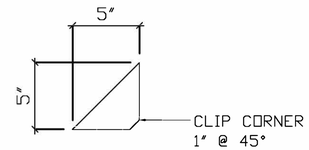

DETAIL C

PL 1/4x5x 0'-5" (d)

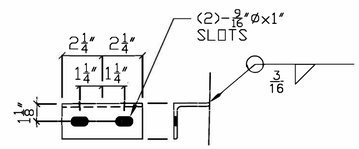

DETAIL B

L 2x2x3/16x 0'-4 1/2" (m)

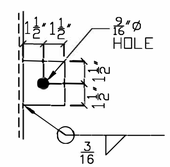

DETAIL A

FB 1/4x3x 0'-3" (k)

BILL OF MATERIAL

NO PCS	MATERIAL	LG FT	LG IN	MK	REMARK	TOTAL WT BLACK
1	WELDMENT			220		
1	HSS 8x8x1/4	8	4 3/4	220		216.8
1	PL 3/4x14	1	2	B220		41.7
1	PL 1/2x19	1	11	C220		61.9
4	PL 1/4x5	0	5	D220		3.6
2	FB 1/4x3	0	3	K220		1.4
2	L 2x2x3/16	0	4 1/2	M220		2.0
					SUBTOTAL	327.4
					3 1/2% GALV.	11.5
					TOTAL WEIGHT PER UNIT	338.9

8 REQUIRED
TOTAL WEIGHT = 2,711.2

NOTES:

1. ALL TUBE - ASTM A500, GR. B
2. ALL W-SHAPES - ASTM A992 GR 50
3. ALL PL 1/2" & THICKER - GR 50 UNO
   ALL OTHER PL & SHAPES - A36 UNO
4. ALL HOLES AS NOTED
5. GALV. AFTER FABRICATION PER ASTM A123.
6. START & STOP WELDS @ ℄ OF TUBES & OCTAGONS.

GALVANIZERS, INC.
RELEASED FOR CONSTRUCTION

DATE	SYM	REVISION RECORD	AUTH.	DR.	CK.

BLACK HILLS POWER INC.
WEST RAPID CITY SUBSTATION
P.O. NO: 5010015188
RAPID CITY, SD
SPEC. NO.: SANDMAN STRUCTURAL ENG.
REF. DWG.: 11-HSSD-220

GALVANIZERS, INC.

BLACK HILLS POWER

DRAWN BY	CHECKED BY
SLK	SLK
FILE NAME RCSD220	CHECK DATE: 1/2/19

TITLE: PT STAND W/O J-BOX

DATE: 1/2/19

DRAWING NUMBER: 19-RCSD-220

P:\04233\00\DWG\RECORD\WRC\CAD\WRC-C-417.DWG

DGR ENGINEERING
ROCK RAPIDS, IOWA
(712) 472-2531

DATE	DRAWN BY	NO.	APPROVED BY	REVISION DESCRIPTION
06-20	KLV	1	PDK	CONFORMING TO CONSTRUCTION RECORDS
10-19	SMW	0	PDK	FOR CONSTRUCTION

BLACK HILLS ENERGY

WEST RAPID SUBSTATION

STEEL DETAILS
69 KV PT WITHOUT J-BOX

DRAWN BY SMW DATE 10-19
APPROVED BY PDK DATE 10-19
DWG NO. WRC-C-417
SCALE: NONE
SHEET 1

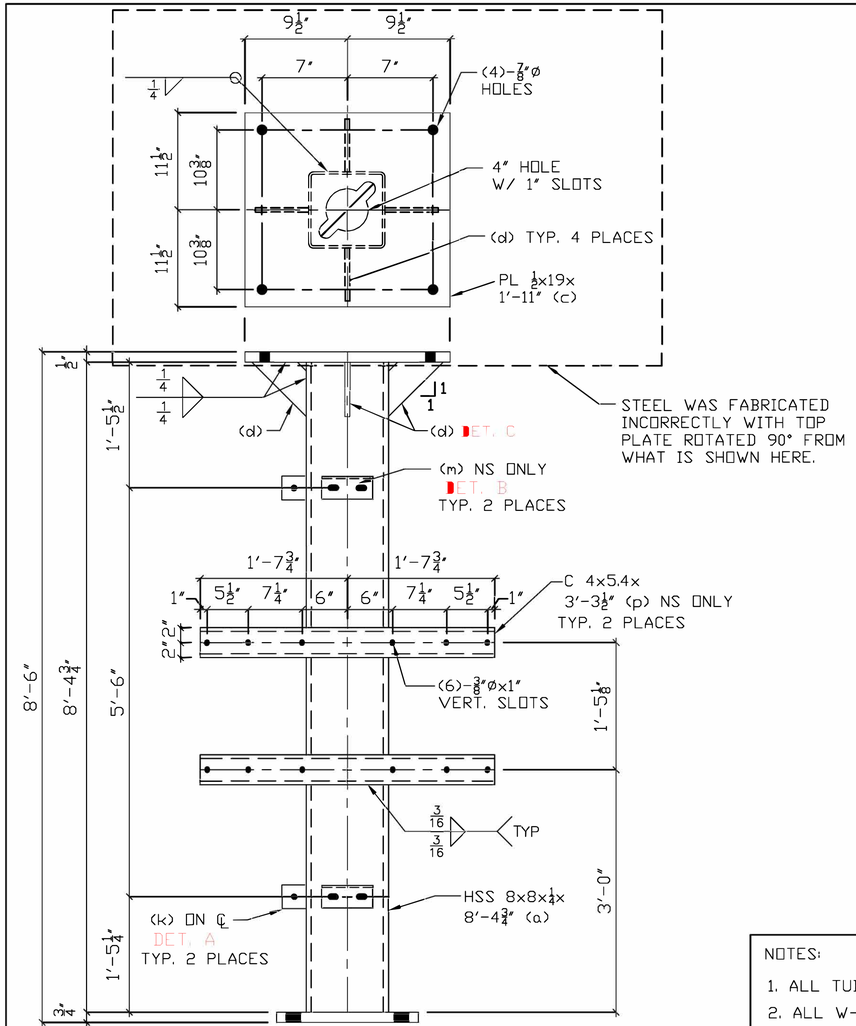

WELDMENT 221

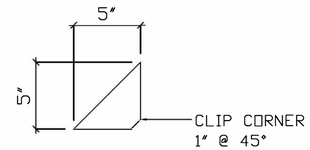

DETAIL C

PL 1/4x5x 0'-5" (d)

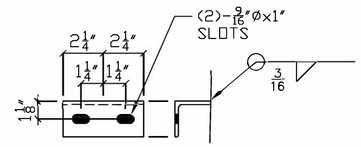

DETAIL B

L 2x2x3/16x 0'-4 1/2" (m)

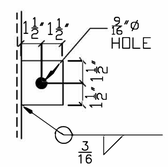

DETAIL ▲

FB 1/4x3x 0'-3" (k)

BILL OF MATERIAL

NO PCS	MATERIAL	LG FT	LG IN	MK	REMARK	TOTAL WT BLACK
1	WELDMENT			221		
1	HSS 8x8x1/4	8	4 3/4	221		216.8
1	PL 3/4x14	1	2	B221		41.7
1	PL 1/2x19	1	11	C221		61.9
4	PL 1/4x5	0	5	D221		3.6
2	FB 1/4x3	0	3	K221		1.4
2	L 2x2x3/16	0	4 1/2	M221		2.0
2	C 4x5.4	3	3 1/2	P221		35.6
					SUBTOTAL	363.0
					3 1/2% GALV.	12.7
					TOTAL WEIGHT PER UNIT	375.7

5 REQUIRED
TOTAL WEIGHT = 1,878.5

NOTES:

1. ALL TUBE - ASTM A500, GR. B
2. ALL W-SHAPES - ASTM A992 GR 50
3. ALL PL 1/2" & THICKER - GR 50 UNO
   ALL OTHER PL & SHAPES - A36 UNO
4. ALL HOLES AS NOTED
5. GALV. AFTER FABRICATION PER ASTM A123.
6. START & STOP WELDS @ ℄ OF TUBES & OCTAGONS.

GALVANIZERS, INC.
RELEASED FOR CONSTRUCTION

DATE	SYM	REVISION RECORD	AUTH.	DR.	CK.

BLACK HILLS POWER INC.
WEST RAPID CITY SUBSTATION
P.O. NO: 5010015188
RAPID CITY, SD
SPEC. NO.: SANDMAN STRUCTURAL ENG.
REF. DWG.: 11-HSSD-220

GALVANIZERS, INC.

BLACK HILLS POWER

DRAWN BY SLK | CHECKED BY SLK
FILE NAME RCSD221 | CHECK DATE: 1/2/19

TITLE: PT STAND W/ J-BOX

DATE 1/2/19 | DRAWING NUMBER 19-RCSD-221

P:\04\233\000\DWG\RECORD\WRC\CAD\WRC-C-418.DWG

DGR ENGINEERING
ROCK RAPIDS, IOWA
(712) 472-2531

DATE	DRAWN BY	NO.	APPROVED BY	REVISION DESCRIPTION
06-20	KLV	1	PDK	CONFORMING TO CONSTRUCTION RECORDS
10-19	SMW	0	PDK	FOR CONSTRUCTION

BLACK HILLS ENERGY
WEST RAPID SUBSTATION
STEEL DETAILS
69 KV PT WITH J-BOX

DRAWN BY SMW DATE 10-19
APPROVED BY PDK DATE 10-19
DWG NO. WRC-C-418
REVISION 1

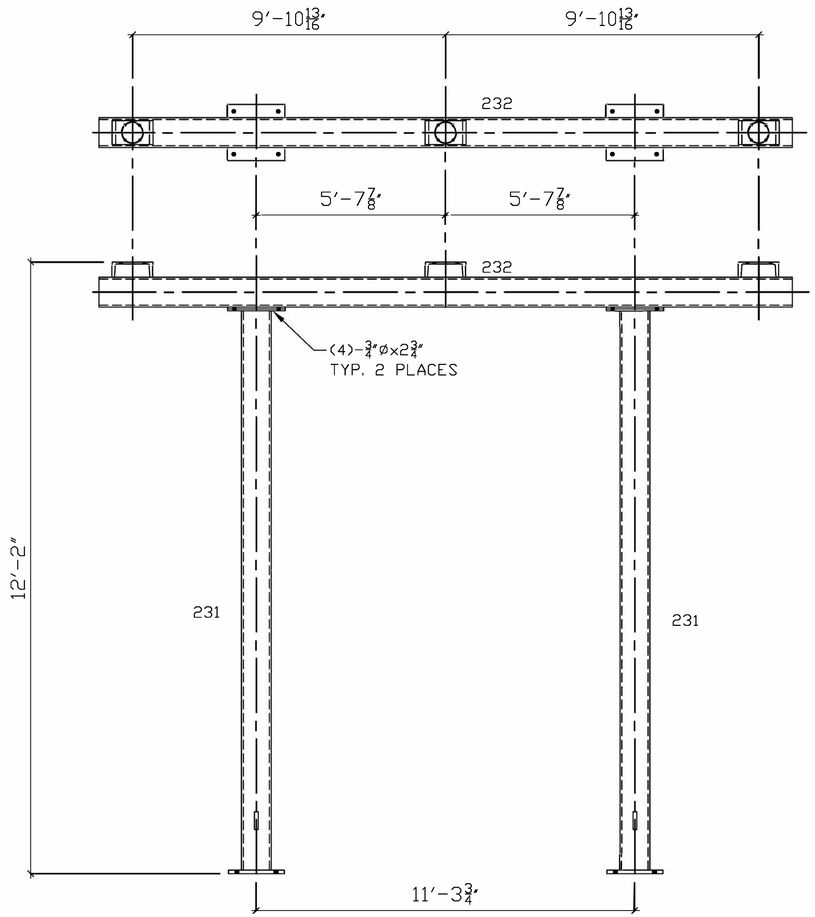

4 REQUIRED
TOTAL WEIGHT = 5,478.0

BILL OF MATERIAL

NO PCS	MATERIAL	LG FT	LG IN	MK	REMARK	TOTAL WT BLACK
2	WELDMENTS			231		
2	HSS 8x8x1/4	11	2	231		576.8
2	PL 3/4x14	1	2	B231		83.4
2	PL 1/2x13 1/2	1	1 1/2	C231		51.8
2	FB 1/4x3	0	3	K231		1.4
1	WELDMENT			232		
1	HSS 8x8x1/4	20	6 5/8	232		530.7
2	PL 1/2x13 1/2	1	1 1/2	B232		51.8
3	C 8x11.5	0	6 1/2	C232		18.9
2	1/2x16 GA.x 8	0	8	D232	EXP MTL	0.8
	HARDWARE (+5%)					
9	MB 3/4	0	2 3/4		A325 BOLTS	7.0
9	HHN 3/4 NC				HVY HEX NUTS	
18	FW 3/4				HARDENED	
9	MFN 3/4				MF LOCKNUTS	0.6
					SUBTOTAL	1323.2
					3 1/2% GALV.	46.3
					TOTAL WEIGHT PER UNIT	1369.5

NOTES:

1. ALL TUBE - ASTM A500, GR. B
2. ALL W-SHAPES - ASTM A992 GR 50
3. ALL PL 1/2" & THICKER - GR 50 UNO
   ALL OTHER PL & SHAPES - A36 UNO
4. ALL HOLES AS NOTED
5. GALV. AFTER FABRICATION
   PER ASTM A123.
6. START & STOP WELDS @
   ℄ OF TUBES & OCTAGONS.
7. FOR DETAIL DRAWINGS
   SEE SHEETS 231-232

GALVANIZERS, INC.
RELEASED FOR CONSTRUCTION

DATE	SYM	REVISION RECORD	AUTH.	DR.	CK.

BLACK HILLS POWER INC.
WEST RAPID CITY SUBSTATION
P.O. NO: 5010015188
RAPID CITY, SD
SPEC. NO.: SANDMAN STRUCTURAL ENG.
REF. DWG.: 11-HSSD-230

GALVANIZERS, INC.

BLACK HILLS POWER

DRAWN BY	CHECKED BY
SLK	SLK
FILE NAME RCSD230	CHECK DATE: 1/2/19

TITLE
3ø ANGLE BUS SUPPORT (6L3A)

DATE 1/2/19

DRAWING NUMBER
19-RCSD-230

P:\04233\00\DWG\RECORD\WRC\CAD\WRC-C-419A.DWG

DGR ENGINEERING
ROCK RAPIDS, IOWA
(712) 472-2531

DATE	DRAWN BY	NO.	APPROVED BY	REVISION DESCRIPTION
06-20	KLV	1	PDK	CONFORMING TO CONSTRUCTION RECORDS
10-19	SMW	0	PDK	FOR CONSTRUCTION

BLACK HILLS ENERGY
WEST RAPID SUBSTATION
STEEL DETAILS
69 KV BUS SUPPORT 6L3A

DRAWN BY SMW DATE 10-19
APPROVED BY PDK DATE 10-19
DWG NO. WRC-C-419A REVISION NO. 1

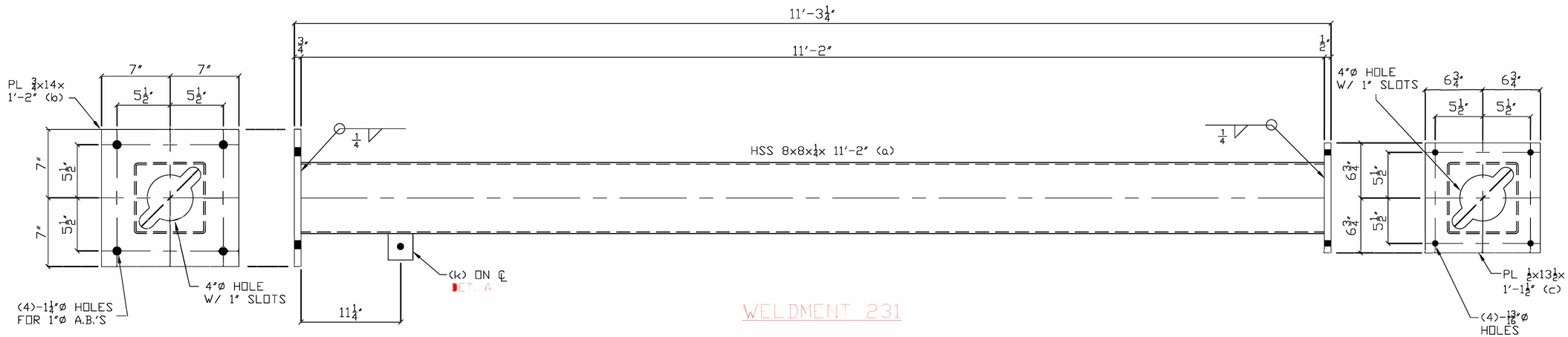

WELDMENT 231

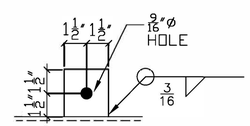

DETAIL A

FB 1/4x3x 0'-3" (k)

NOTE:
START AND STOP WELDS ON CENTER LINE OF TUBE

GALVANIZERS, INC.
RELEASED FOR CONSTRUCTION

DATE	SYM	REVISION RECORD	AUTH.	DR.	CK.

BLACK HILLS POWER INC.
WEST RAPID CITY SUBSTATION
P.O. NO: 5010015188
RAPID CITY, SD
SPEC. NO.: SANDMAN STRUCTURAL ENG.
REF. DWG.: 11-HSSD-231

GALVANIZERS, INC.

BLACK HILLS POWER

DRAWN BY	CHECKED BY
SLK	SLK
FILE NAME RCSD231	CHECK DATE: 1/2/19

TITLE: 3Ø ANGLE BUS SUPPORT (6L3A)

DATE: 1/2/19

DRAWING NUMBER: 19-RCSD-231

P:\04233\00\DWG\RECORD\WRC\CAD\WRC-C-419B.DWG

DGR ENGINEERING
ROCK RAPIDS, IOWA
(712) 472-2531

DATE	DRAWN BY	NO.	APPROVED BY	REVISION DESCRIPTION
06-20	KLV	1	PDK	CONFORMING TO CONSTRUCTION RECORDS
10-19	SMW	0	PDK	FOR CONSTRUCTION

BLACK HILLS ENERGY

WEST RAPID SUBSTATION

STEEL DETAILS
69 KV BUS SUPPORT 6L3A

DRAWN BY	SMW	DATE	10-19	DWG NO.	WRC-C-419B
APPROVED BY	PDK	DATE	10-19	SCHEDULE NO.	1

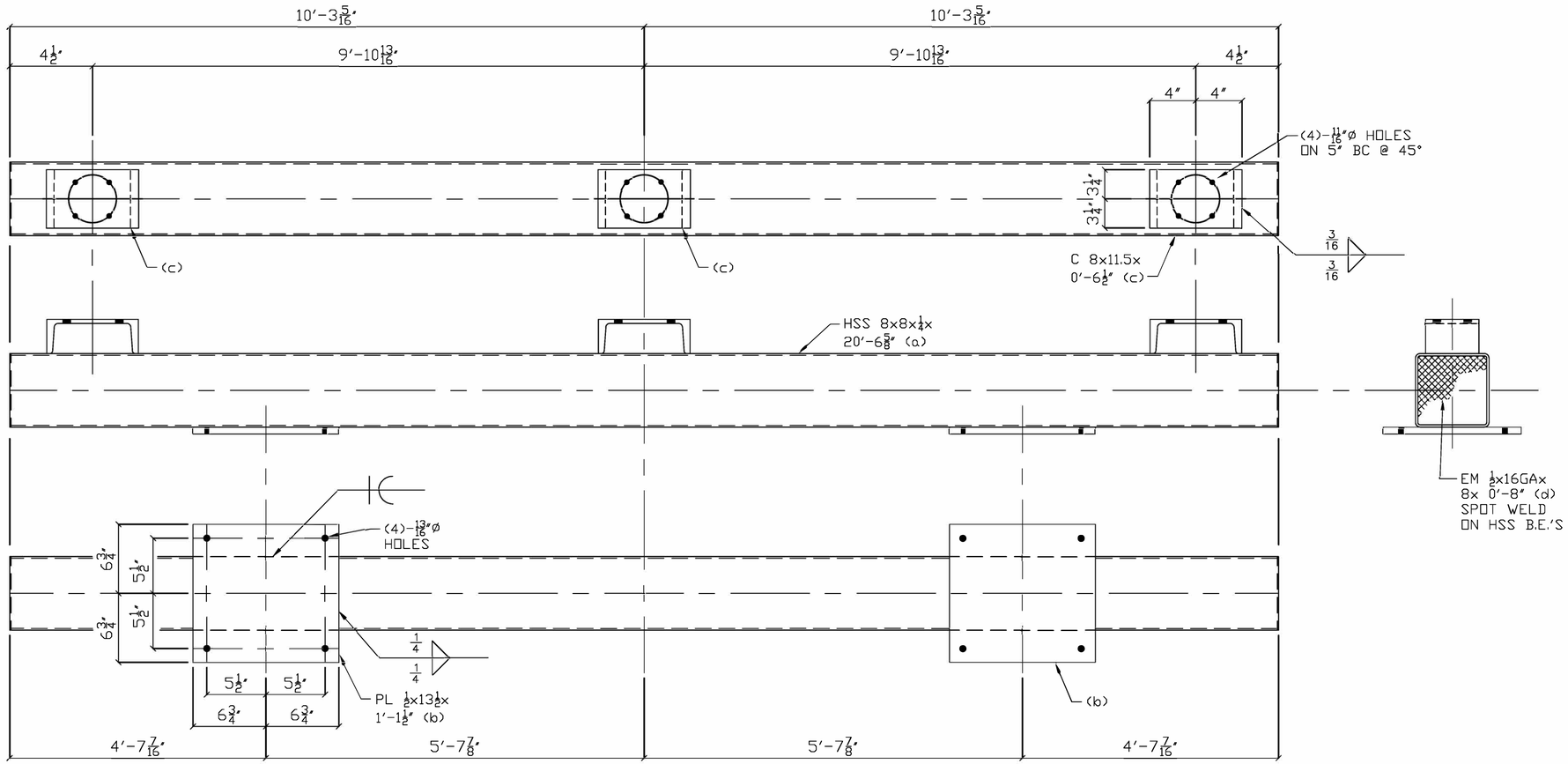

WELDMENT 232

NOTE:
START AND STOP WELDS ON
CENTER LINE OF TUBE

GALVANIZERS, INC.
RELEASED FOR CONSTRUCTION

DATE	SYM	REVISION RECORD	AUTH.	DR.	CK.

BLACK HILLS POWER INC.
WEST RAPID CITY SUBSTATION
P.O. NO: 5010015188
RAPID CITY, SD
SPEC. NO.: SANDMAN STRUCTURAL ENG.
REF. DWG.: 11-HSSD-232

GALVANIZERS, INC.

BLACK HILLS POWER

DRAWN BY	CHECKED BY
SLK	SLK
FILE NAME RCSD232	CHECK DATE: 1/2/19

TITLE
3ø ANGLE BUS SUPPORT (6L3A)

DATE 1/2/19

DRAWING NUMBER 19-RCSD-232

P:\04\233\00\DWG\RECORD\WRC\CAD\WRC-C-419C.DWG

DGR ENGINEERING
ROCK RAPIDS, IOWA
(712) 472-2531

DATE	DRAWN BY	NO.	APPROVED BY	REVISION DESCRIPTION
06-20	KLV	1	PDK	CONFORMING TO CONSTRUCTION RECORDS
10-19	SMW	0	PDK	FOR CONSTRUCTION

BLACK HILLS ENERGY
WEST RAPID SUBSTATION
STEEL DETAILS
69 KV BUS SUPPORT 6L3A

DRAWN BY SMW DATE 10-19
APPROVED BY PDK DATE 10-19
DWG NO. WRC-C-419C REVISION 1

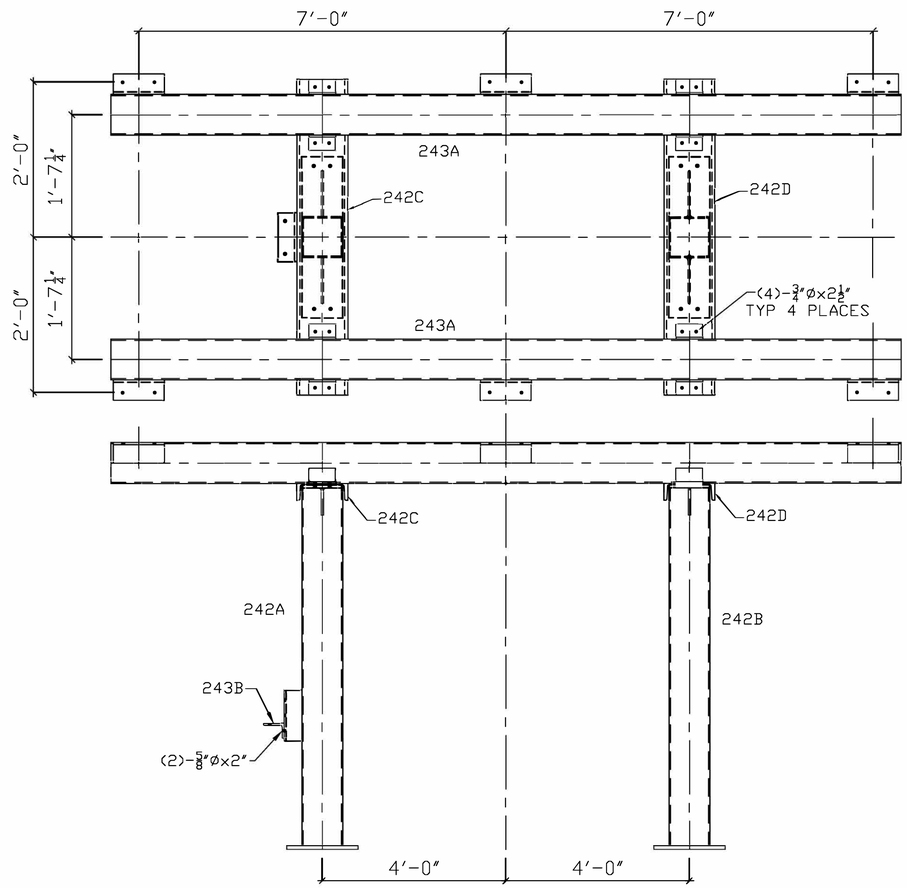

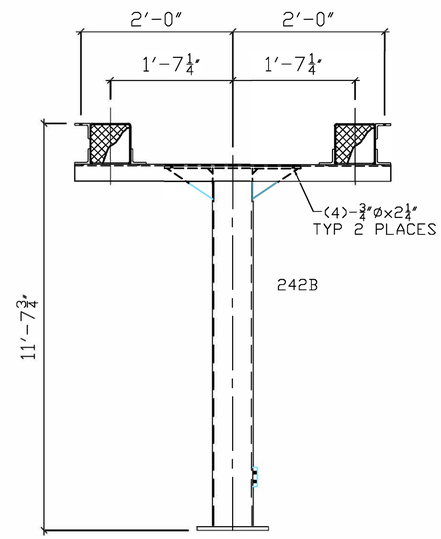

GALVANIZERS, INC.
RELEASED FOR CONSTRUCTION

DATE	SYM	REVISION RECORD	AUTH.	DR.	CK.

BLACK HILLS POWER INC.
WEST RAPID CITY SUBSTATION
P.O. NO: 5010015188
RAPID CITY, SD
SPEC. NO.: SANDMAN STRUCTURAL ENG.
REF. DWG.: 11-HSSD-240

GALVANIZERS, INC.

BLACK HILLS POWER

DRAWN BY	CHECKED BY
SLK	SLK
FILE NAME	CHECK DATE:
RCSD240	1/2/19

TITLE
LOW SWITCH STAND (6LS)

DATE 1/2/19

DRAWING NUMBER
19-RCSD-240

P:\04233\00\DWG\RECORD\WRC\CAD\WRC-C-420A.DWG

DGR ENGINEERING
ROCK RAPIDS, IOWA
(712) 472-2531

DATE	DRAWN BY	NO.	APPROVED BY	REVISION DESCRIPTION
06-20	KLV	1	PDK	CONFORMING TO CONSTRUCTION RECORDS
10-19	SMW	0	PDK	FOR CONSTRUCTION

BLACK HILLS ENERGY
WEST RAPID SUBSTATION
STEEL DETAILS
69 KV SWITCH STAND 6LS

DRAWN BY	SMW	DATE	10-19
APPROVED BY	PDK	DATE	10-19

DWG NO. WRC-C-420A REVISION 1

BILL OF MATERIAL

NO PCS	MATERIAL	LG FT	LG IN	MK	REMARK	TOTAL WT BLACK
1	WELDMENT			242A		
1	HSS 8x8x1/4	11	0 3/16	242A		284.5
1	PL 3/4x14	1	2	B242A		41.7
1	PL 1/2x8	2	3	C242A		30.6
1	MC 6x18	0	10	D242A		15.0
2	PL 1/4x6	0	9	G242A		3.9
2	FB 1/4x3	0	3	K242A		1.4
1	WELDMENT			242B		
1	HSS 8x8x1/4	11	0 3/16	242B		284.5
1	PL 3/4x14	1	2	B242B		41.7
1	PL 1/2x8	2	3	C242B		30.6
2	PL 1/4x6	0	9	G242B		3.9
1	FB 1/4x3	0	3	K242B		0.7
1	WELDMENT			242C		
1	MC 10x22	4	2 1/2	242C		92.5
1	L 4x3 1/2x5/16	0	8 1/2	B242C		5.5
1	PL 1/2x3	0	4	C242C		1.7
1	MC 10x22	4	2 1/2	242D	SHIP LOOSE	92.5
2	WELDMENTS			243A		
2	HSS 6x6x1/4	14	11	243A		572.0
8	L 3x3x3/8	0	5 1/4	B243A		25.6
6	L 3x3x3/8	0	10 1/2	C243A		37.8
4	EM 1/2x16 GAx6	0	6	D243A	EXP MTL	1.2
1	L 4x3x3/8	0	6	243B	SHIP LOOSE	4.3

BILL OF MATERIAL

NO PCS	MATERIAL	LG FT	LG IN	MK	REMARK	TOTAL WT BLACK
	HARDWARE (+5%)					
9	MB 3/4	0	2 1/4		A325 BOLTS	6.4
17	MB 3/4	0	2 1/2		A325 BOLTS	12.7
26	HHN 3/4 NC				HVY HEX NUTS	
52	FW 3/4				HARDENED	
26	MFN 3/4				MF LOCKNUTS	1.7
3	MB 5/8	0	2		A325 BOLTS	1.5
3	HHN 5/8 NC				HVY HEX NUTS	
6	FW 5/8				HARDENED	
3	MFN 5/8				MF LOCKNUTS	0.2
					SUBTOTAL	1594.1
					3 1/2% GALV.	55.8
					TOTAL WEIGHT PER UNIT	1649.9

12 REQUIRED
TOTAL WEIGHT = 19,798.8

NOTES:

1. ALL TUBE - ASTM A500, GR. B
2. ALL W-SHAPES - ASTM A992 GR 50
3. ALL PL 1/2" & THICKER - GR 50 UNO
   ALL OTHER PL & SHAPES - A36 UNO
4. ALL HOLES AS NOTED
5. GALV. AFTER FABRICATION
   PER ASTM A123.
6. START & STOP WELDS @
   ℄ OF TUBES & OCTAGONS.
7. FOR ERECTION DRAWING
   SEE SHEET 240
8. FOR DETAIL DRAWINGS
   SEE SHEETS 242-243

GALVANIZERS, INC.
RELEASED FOR CONSTRUCTION

DATE	SYM	REVISION RECORD	AUTH.	DR.	CK.

BLACK HILLS POWER INC.
WEST RAPID CITY SUBSTATION
P.O. NO: 5010015188
RAPID CITY, SD
SPEC. NO.: SANDMAN STRUCTURAL ENG.
REF. DWG.: 11-HSSD-241

GALVANIZERS, INC.

BLACK HILLS POWER

DRAWN BY: SLK
CHECKED BY: SLK
FILE NAME: RCSD241
CHECK DATE: 1/2/19

TITLE: LOW SWITCH STAND (6LS)

DATE: 1/2/19

DRAWING NUMBER: 19-RCSD-241

DATE	DRAWN BY	NO.	APPROVED BY	REVISION DESCRIPTION
06-20	KLV	1	PDK	CONFORMING TO CONSTRUCTION RECORDS
10-19	SMW	0	PDK	FOR CONSTRUCTION

BLACK HILLS ENERGY

WEST RAPID SUBSTATION

STEEL DETAILS
69 KV SWITCH SUPPORT 6LS

DRAWN BY: SMW DATE: 10-19
APPROVED BY: PDK DATE: 10-19
DWG NO.: WRC-C-420B
REVISION: 1

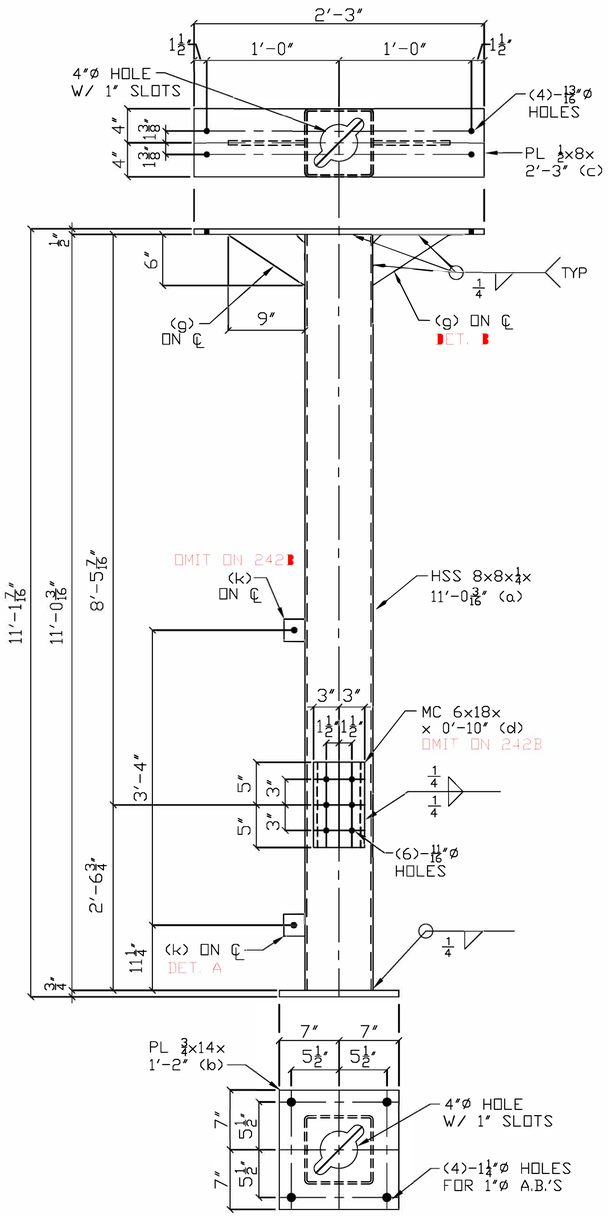

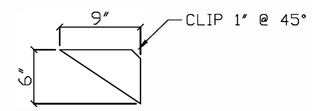

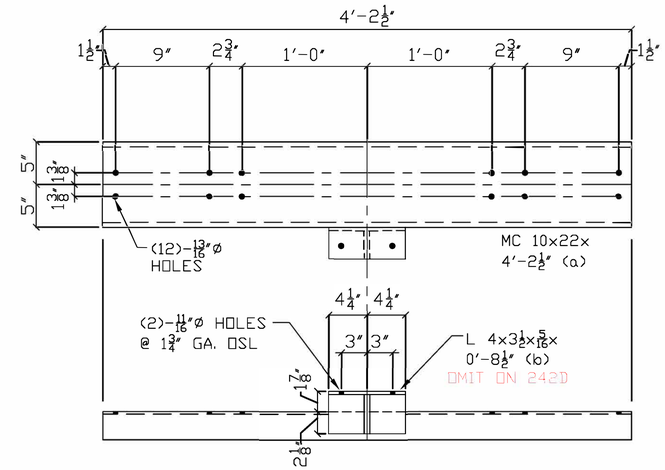

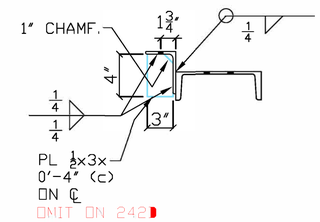

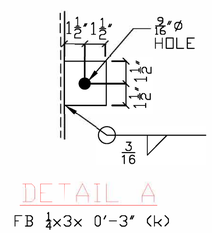

NOTE:
START AND STOP WELDS ON
CENTER LINE OF TUBE

GALVANIZERS, INC.
RELEASED FOR CONSTRUCTION

DATE	SYM	REVISION RECORD	AUTH.	DR.	CK.

BLACK HILLS POWER INC.
WEST RAPID CITY SUBSTATION
P.O. NO: 5010015188
RAPID CITY, SD
SPEC. NO.: SANDMAN STRUCTURAL ENG.
REF. DWG.: 11-HSSD-242

GALVANIZERS, INC.

BLACK HILLS POWER

DRAWN BY	CHECKED BY
SLK	SLK
FILE NAME RCSD242	CHECK DATE: 1/2/19

TITLE: LOW SWITCH STAND (6LS)

DATE: 1/2/19

DRAWING NUMBER: 19-RCSD-242

P:\04123\00\DWG\RECORD\WRC\CAD\WRC-C-420C.DWG

DGR ENGINEERING
ROCK RAPIDS, IOWA
(712) 472-2531

DATE	DRAWN BY	NO.	APPROVED BY	REVISION DESCRIPTION
06-20	KLV	1	PDK	CONFORMING TO CONSTRUCTION RECORDS
10-19	SMW	0	PDK	FOR CONSTRUCTION

BLACK HILLS ENERGY

WEST RAPID SUBSTATION

STEEL DETAILS
69 KV SWITCH STAND 6LS

DRAWN BY SMW DATE 10-19
APPROVED BY PDK DATE 10-19
DWG NO. WRC-C-420C
REVISION 1

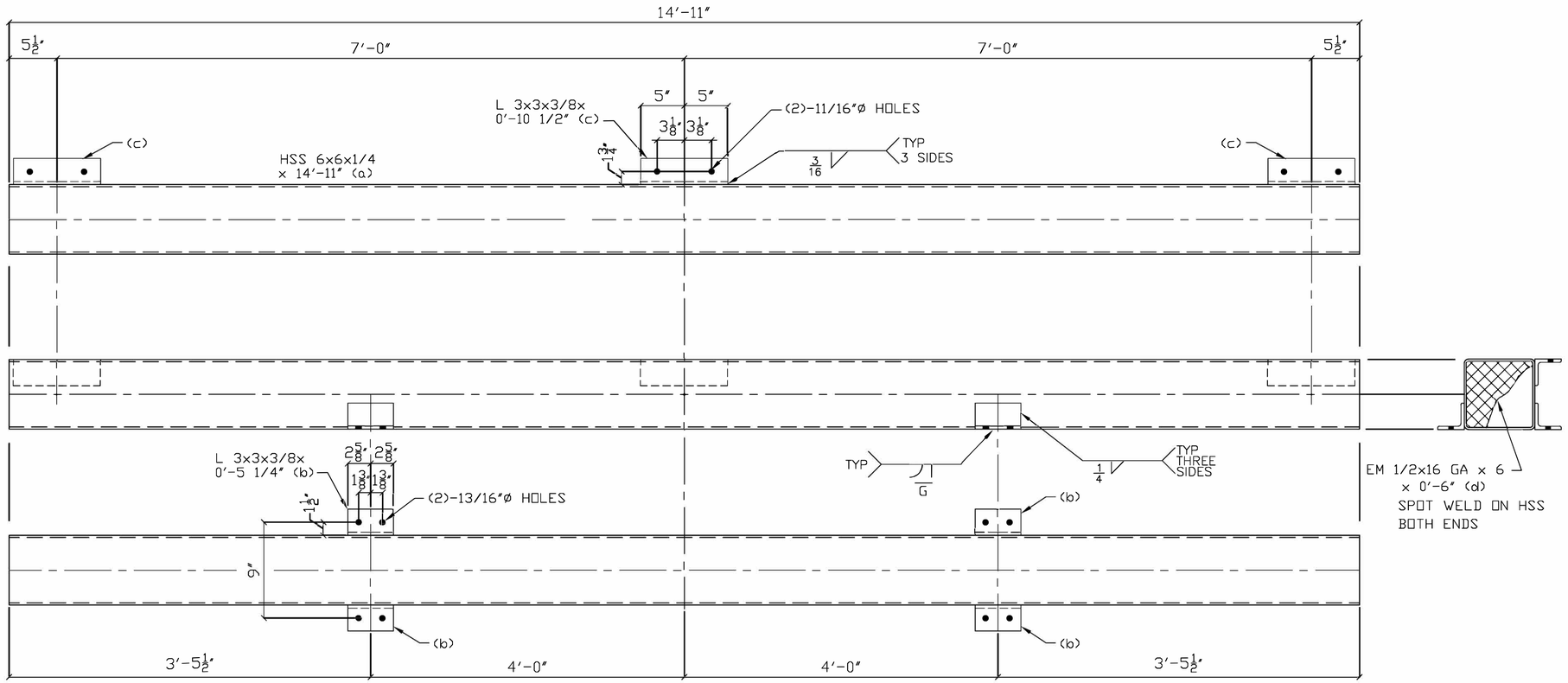

WELDMENT 243A

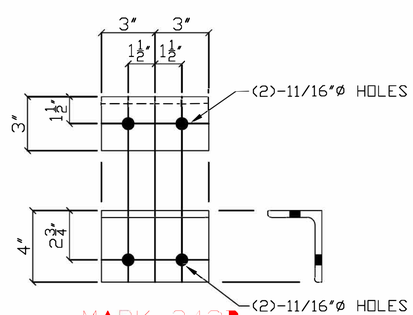

MARK 243B

L 4x3x3/8x 0'-6"
SHIP LOOSE

NOTE:
START AND STOP WELDS ON
CENTER LINE OF TUBE

GALVANIZERS, INC.
RELEASED FOR CONSTRUCTION

DATE	SYM	REVISION RECORD	AUTH.	DR.	CK.

BLACK HILLS POWER INC.
WEST RAPID CITY SUBSTATION
P.O. NO: 5010015188
RAPID CITY, SD
SPEC. NO.: SANDMAN STRUCTURAL ENG.
REF. DWG.: 11-HSSD-243

GALVANIZERS, INC.

BLACK HILLS POWER

DRAWN BY	CHECKED BY
SLK	SLK
FILE NAME RCSD243	CHECK DATE: 1/2/19

TITLE
LOW SWITCH STAND (6LS)

DATE 1/2/19

DRAWING NUMBER
19-RCSD-243

P:\04233\00\DWG\RECORD\WRC\CAD\WRC-C-420D.DWG

DGR ENGINEERING
ROCK RAPIDS, IOWA
(712) 472-2531

DATE	DRAWN BY	NO.	APPROVED BY	REVISION DESCRIPTION
06-20	KLV	1	PDK	CONFORMING TO CONSTRUCTION RECORDS
10-19	SMW	0	PDK	FOR CONSTRUCTION

BLACK HILLS ENERGY
WEST RAPID SUBSTATION
STEEL DETAILS
69 KV SWITCH STAND 6LS

DRAWN BY SMW DATE 10-19
APPROVED BY PDK DATE 10-19
DWG NO. WRC-C-420D REVISION 1

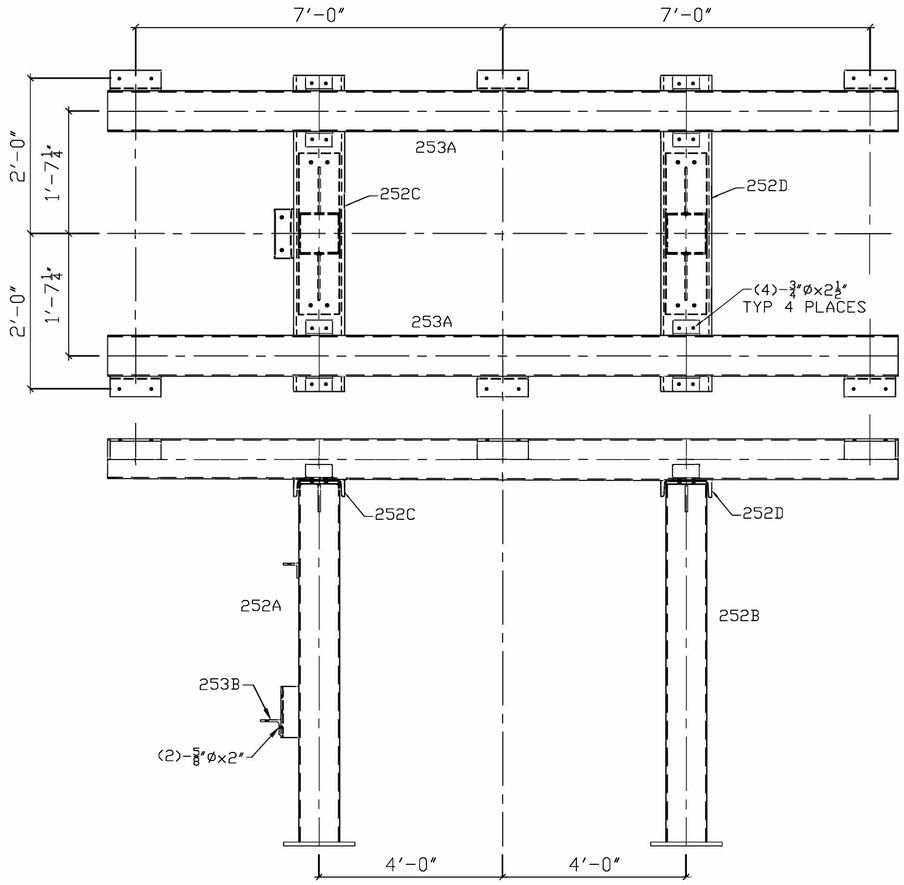

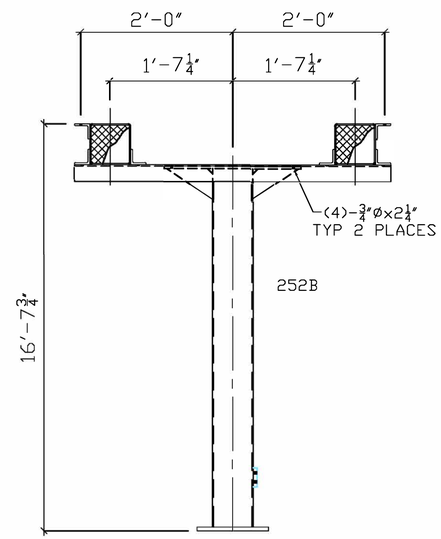

GALVANIZERS, INC.
RELEASED FOR CONSTRUCTION

DATE	SYM	REVISION RECORD	AUTH.	DR.	CK.

BLACK HILLS POWER INC.
WEST RAPID CITY SUBSTATION
P.O. NO: 5010015188
RAPID CITY, SD
SPEC. NO.: SANDMAN STRUCTURAL ENG.
REF. DWG.: 11-HSSD-240

GALVANIZERS, INC.

BLACK HILLS POWER

DRAWN BY	CHECKED BY
SLK	SLK
FILE NAME	CHECK DATE:
RCSD250	1/2/19

TITLE
HIGH SWITCH STAND (6HS)

DATE 1/2/19

DRAWING NUMBER 19-RCSD-250

P:\04223\00\DWG\RECORD\WRC\CAD\WRC-C-421A.DWG

DGR ENGINEERING
ROCK RAPIDS, IOWA
(712) 472-2531

DATE	DRAWN BY	NO.	APPROVED BY	REVISION DESCRIPTION
06-20	KLV	1	PDK	CONFORMING TO CONSTRUCTION RECORDS
10-19	SMW	0	PDK	FOR CONSTRUCTION

BLACK HILLS ENERGY
WEST RAPID SUBSTATION
STEEL DETAILS
69 KV SWITCH STAND 6HS

DRAWN BY SMW DATE 10-19
APPROVED BY PDK DATE 10-19
DWG NO. WRC-C-421A SCALE: NONE REV 1

BILL OF MATERIAL

NO PCS	MATERIAL	LG FT	LG IN	MK	REMARK	TOTAL WT BLACK
1	WELDMENT			252A		
1	HSS 8x8x1/4	16	0 3/16	252A		413.6
1	PL 3/4x14	1	2	B252A		41.7
1	PL 1/2x8	2	3	C252A		30.6
1	MC 6x18	0	10	D252A		15.0
2	PL 1/4x6	0	9	G252A		3.9
2	FB 1/4x3	0	3	K252A		1.4
1	L 4x3x3/8	0	6	P252A		4.3
1	WELDMENT			252B		
1	HSS 8x8x1/4	16	0 3/16	252B		413.6
1	PL 3/4x14	1	2	B252B		41.7
1	PL 1/2x8	2	3	C252B		30.6
2	PL 1/4x6	0	9	G252B		3.9
1	FB 1/4x3	0	3	K252B		0.7
1	WELDMENT			252C		
1	MC 10x22	4	2 1/2	252C		92.5
1	L 4x3 1/2x5/16	0	8 1/2	B252C		5.5
1	PL 1/2x3	0	4	C252C		1.7
1	MC 10x22	4	2 1/2	252D	SHIP LOOSE	92.5
2	WELDMENTS			253A		
2	HSS 6x6x1/4	14	11	253A		572.0
8	L 3x3x3/8	0	5 1/4	B253A		25.6
6	L 3x3x3/8	0	10 1/2	C253A		37.8
4	EM 1/2x16 GAx6	0	6	D253A	EXP MTL	1.2
1	L 4x3x3/8	0	6	253B	SHIP LOOSE	4.3

BILL OF MATERIAL

NO PCS	MATERIAL	LG FT	LG IN	MK	REMARK	TOTAL WT BLACK
	HARDWARE (+5%)					
9	MB 3/4	0	2 1/4		A325 BOLTS	6.4
17	MB 3/4	0	2 1/2		A325 BOLTS	12.7
26	HHN 3/4 NC				HVY HEX NUTS	
52	FW 3/4				HARDENED	
26	MFN 3/4				MF LOCKNUTS	1.7
3	MB 5/8	0	2		A325 BOLTS	1.5
3	HHN 5/8 NC				HVY HEX NUTS	
6	FW 5/8				HARDENED	
3	MFN 5/8				MF LOCKNUTS	0.2
					SUBTOTAL	1856.6
					3 1/2% GALV.	65.0
					TOTAL WEIGHT PER UNIT	1921.6

ONE REQUIRED
TOTAL WEIGHT = 1,921.6

NOTES:

1. ALL TUBE - ASTM A500, GR. B
2. ALL W-SHAPES - ASTM A992 GR 50
3. ALL PL 1/2" & THICKER - GR 50 UNO
   ALL OTHER PL & SHAPES - A36 UNO
4. ALL HOLES AS NOTED
5. GALV. AFTER FABRICATION PER ASTM A123.
6. START & STOP WELDS @ ℄ OF TUBES & OCTAGONS.
7. FOR ERECTION DRAWING SEE SHEET 250
8. FOR DETAIL DRAWINGS SEE SHEETS 252-253

GALVANIZERS, INC.
RELEASED FOR CONSTRUCTION

DATE	SYM	REVISION RECORD	AUTH.	DR.	CK.

BLACK HILLS POWER INC.
WEST RAPID CITY SUBSTATION
P.O. NO: 5010015188
RAPID CITY, SD
SPEC. NO.: SANDMAN STRUCTURAL ENG.
REF. DWG.: 11-HSSD-241

GALVANIZERS, INC.

BLACK HILLS POWER

DRAWN BY SLK | CHECKED BY SLK
FILE NAME RCSD251 | CHECK DATE: 1/2/19

TITLE
HIGH SWITCH STAND (6HS)

DATE 1/2/19 | DRAWING NUMBER 19-RCSD-251

DATE	DRAWN BY	NO.	APPROVED BY	REVISION DESCRIPTION
06-20	KLV	1	PDK	CONFORMING TO CONSTRUCTION RECORDS
10-19	SMW	0	PDK	FOR CONSTRUCTION

BLACK HILLS ENERGY

WEST RAPID SUBSTATION

STEEL DETAILS
69 KV SWITCH STAND 6HS

DRAWN BY SMW DATE 10-19
APPROVED BY PDK DATE 10-19
DWG NO. WRC-C-421B REVISION NO. 1

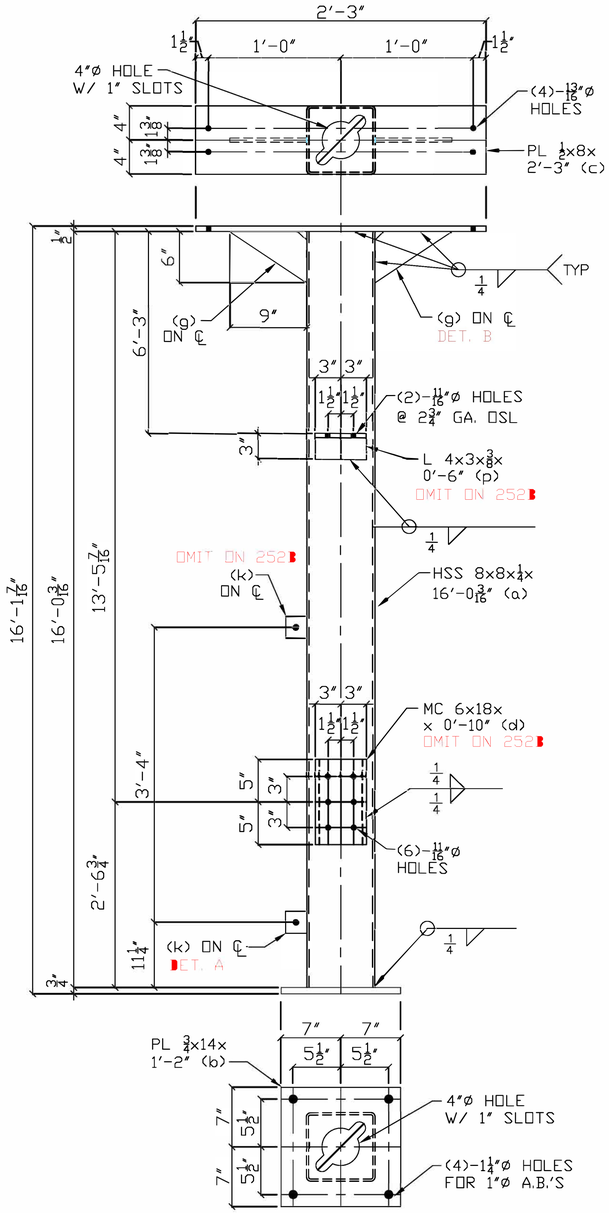

WELDMENT 252A AS SHOWN
WELDMENT 252B AS NOTED

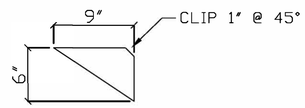

DETAIL B

PL 1/4x6x 0'-9" (g)

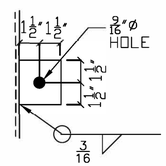

DETAIL A

FB 1/4x3x 0'-3" (k)

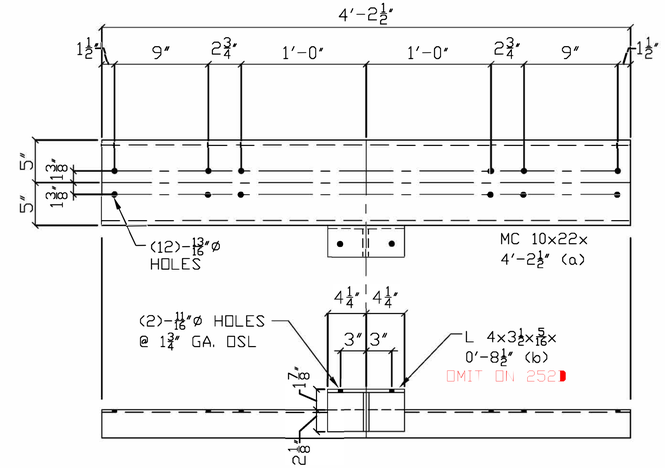

WELDMENT 252C AS SHOWN
WELDMENT 252D AS NOTED

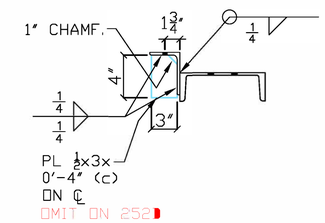

NOTE:
START AND STOP WELDS ON
CENTER LINE OF TUBE

GALVANIZERS, INC.
RELEASED FOR CONSTRUCTION

DATE	SYM	REVISION RECORD	AUTH.	DR.	CK.

BLACK HILLS POWER INC.
WEST RAPID CITY SUBSTATION
P.O. NO: 5010015188
RAPID CITY, SD
SPEC. NO.: SANDMAN STRUCTURAL ENG.
REF. DWG.: 11-HSSD-242

GALVANIZERS, INC.

BLACK HILLS POWER

DRAWN BY	CHECKED BY
SLK	SLK
FILE NAME RCSD252	CHECK DATE: 1/2/19

TITLE
HIGH SWITCH STAND (6HS)

DATE 1/2/19

DRAWING NUMBER
19-RCSD-252

P:\04233\00\DWG\RECORD\WRC\CAD\WRC-C-421C.DWG

DGR ENGINEERING
ROCK RAPIDS, IOWA
(712) 472-2531

DATE	DRAWN BY	NO.	APPROVED BY	REVISION DESCRIPTION
06-20	KLV	1	PDK	CONFORMING TO CONSTRUCTION RECORDS
10-19	SMW	0	PDK	FOR CONSTRUCTION

BLACK HILLS ENERGY
WEST RAPID SUBSTATION
STEEL DETAILS
69 KV SWITCH STAND 6HS

DRAWN BY SMW DATE 10-19
APPROVED BY PDK DATE 10-19
DWG NO. WRC-C-421C REVISION 1 No.

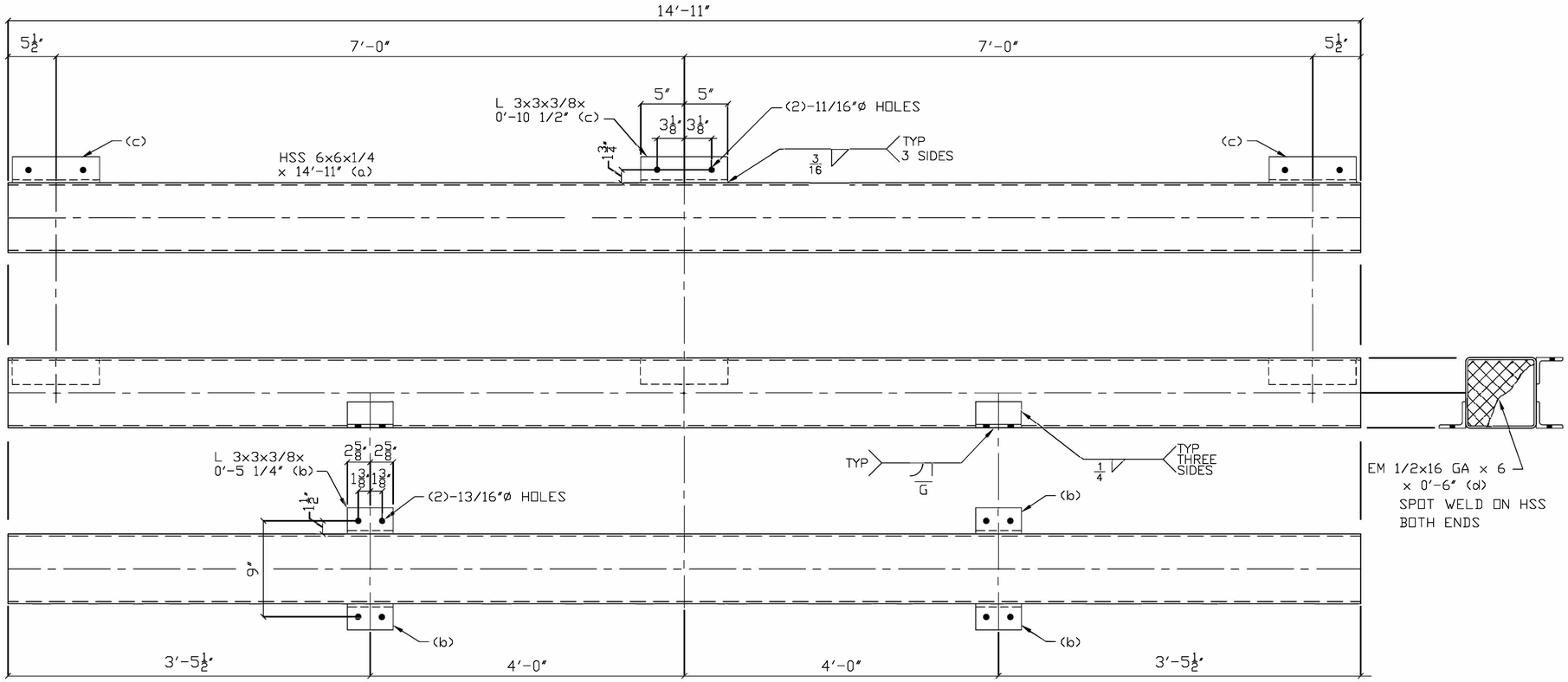

WELDMENT 253A

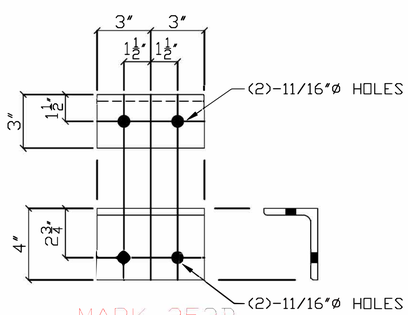

MARK 253B

L 4x3x3/8x 0'-6"
SHIP LOOSE

NOTE:
START AND STOP WELDS ON
CENTER LINE OF TUBE

GALVANIZERS, INC.
RELEASED FOR CONSTRUCTION

DATE	SYM	REVISION RECORD	AUTH.	DR.	CK.

BLACK HILLS POWER INC.
WEST RAPID CITY SUBSTATION
P.O. NO: 5010015188
RAPID CITY, SD
SPEC. NO.: SANDMAN STRUCTURAL ENG.
REF. DWG.: 11-HSSD-243

GALVANIZERS, INC.

BLACK HILLS POWER

DRAWN BY	CHECKED BY
SLK	SLK
FILE NAME	CHECK DATE:
RCSD253	1/2/19

TITLE
HIGH SWITCH STAND (6HS)

DATE 1/2/19

DRAWING NUMBER
19-RCSD-253

P:\04\233\00\DWG\RECORD\WRC\CAD\WRC-C-421D.DWG

DGR ENGINEERING
ROCK RAPIDS, IOWA
(712) 472-2531

DATE	DRAWN BY	NO.	APPROVED BY	REVISION DESCRIPTION
06-20	KLV	1	PDK	CONFORMING TO CONSTRUCTION RECORDS
10-19	SMW	0	PDK	FOR CONSTRUCTION

BLACK HILLS ENERGY
WEST RAPID SUBSTATION
STEEL DETAILS
69 KV SWITCH STAND 6HS

DRAWN BY SMW DATE 10-19
APPROVED BY PDK DATE 10-19
DWG NO. WRC-C-421D REVISION 1

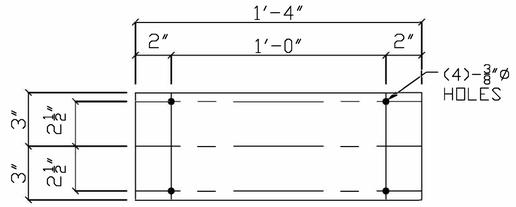

MARK 260A
PL 10GAx6x 1'-4"
(SHIP LOOSE)

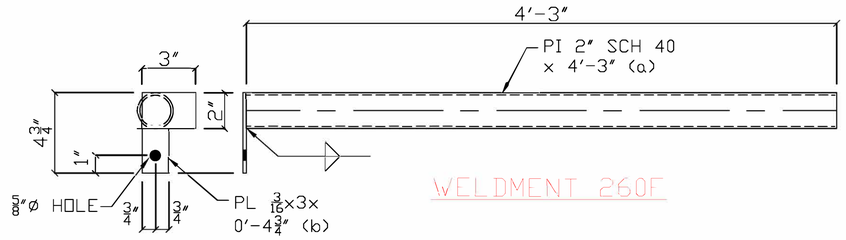

WELDMENT 260F

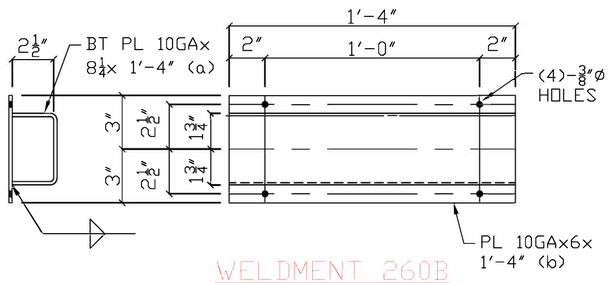

WELDMENT 260B

2 REQUIRED
TOTAL WEIGHT = 99.0

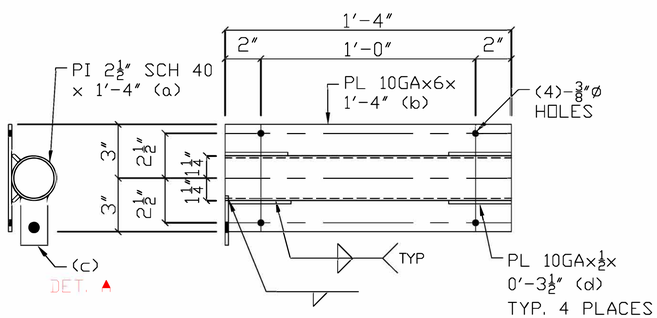

WELDMENT 260C

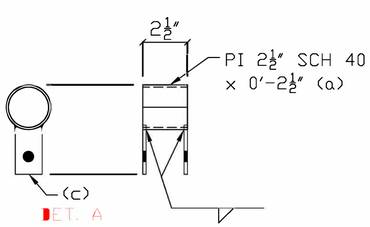

WELDMENT 260D

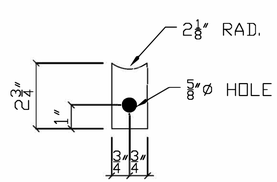

DETAIL A
PL 10GAx1 1/2x 0'-2 3/4" (c)

NOTES:

1. ALL PL & SHAPES - ASTM A36 UNO
2. GALV. AFTER FABRICATION PER ASTM A123

GALVANIZERS, INC.
RELEASED FOR CONSTRUCTION

DATE	SYM	REVISION RECORD	AUTH.	DR.	CK.

BILL OF MATERIAL

NO PCS	MATERIAL	LG FT	LG IN	MK	REMARK	TOTAL WT BLACK
2	PL 10GAx6	1	4	260A	BACKER PLATE	7.6
1	WELDMENT			260B	CAPTURE TUBE	
1	PL 10GAx8 1/4	1	4	260B	BENT	5.3
1	PL 10GAx6	1	4	B260B		3.8
1	WELDMENT			260C	PAD LOCK TUBE	
1	PI 2 1/2 SCH 40	1	4	260C		7.8
1	PL 10GAx6	1	4	B260C		3.8
1	PL 10GAx1 1/2	0	2 3/4	C260C		0.2
4	PL 10GAx1/2	0	3 1/2	D260C		0.4
1	WELDMENT			260D	SLIDING SPACER	
1	PI 2 1/2 SCH 40	0	2 1/2	260D		1.2
2	PL 10GAx1 1/2	0	2 3/4	C260D		0.4
1	WELDMENT			260F	SLIDING BAR	
1	PI 2 SCH 40	4	3	260F		15.5
1	PL 3/16x3	0	4 3/4	B260F		0.8
	HARDWARE (+5%)					
9	MB 5/16	0	3 1/2		BOLTS	0.8
9	HN 5/16 NC				HEX NUTS	0.1
9	FW 5/16				FLAT WASHERS	0.1
					SUBTOTAL	47.8
					3 1/2% GALV.	1.7
					TOTAL WEIGHT PER UNIT	49.5

BLACK HILLS POWER INC.
WEST RAPID CITY SUBSTATION
P.O. NO: 5010015188
RAPID CITY, SD
SPEC. NO.: SANDMAN STRUCTURAL ENG.
REF. DWG.: 18-GW-20

GALVANIZERS, INC.

BLACK HILLS POWER

DRAWN BY	CHECKED BY
SLK	SLK
FILE NAME	CHECK DATE:
RCSD260	1/2/19

TITLE
SLIDING GATE CLOSER & LOCK

DATE 1/2/19

DRAWING NUMBER
19-RCSD-260

DATE	DRAWN BY	NO.	APPROVED BY	REVISION DESCRIPTION
06-20	KLV	1	PDK	CONFORMING TO CONSTRUCTION RECORDS
10-19	SMW	0	PDK	FOR CONSTRUCTION

BLACK HILLS ENERGY
WEST RAPID SUBSTATION
STEEL DETAILS
SLIDING GATE CLOSER AND LOCK

DRAWN BY SMW DATE 10-19
APPROVED BY PDK DATE 10-19
DWG NO. WRC-C-422 REVISION NO. 1

DGR ENGINEERING
ROCK RAPIDS, IOWA
(712) 472-2531

P:\04233\00\DWG\RECORD\WRC\CAD\WRC-C-422.DWG

SHIELD WIRE: 3/8" EHS STEEL
1000# DESIGN TENSION (NESC HEAVY)

Ruling Span = 140'
Condition Initial Temperature (deg F) 60
Results below for 'Initial RS' condition

SAGGING

Span Length	Mid Span Sag 0 F	Mid Span Sag 10 F	Mid Span Sag 20 F	Mid Span Sag 30 F	Mid Span Sag 40 F	Mid Span Sag 50 F	Mid Span Sag 60 F	Mid Span Sag 70 F	Mid Span Sag 80 F	Mid Span Sag 90 F	Mid Span Sag 100 F
(ft-in)	(ft-in)	(ft-in)	(ft-in)	(ft-in)	(ft-in)	(ft-in)	(ft-in)	(ft-in)	(ft-in)	(ft-in)	(ft-in)
70-0	0-8	0-8	0-8	0-8	0-9	0-9	0-9	0-9	0-10	0-10	0-10
80-0	0-10	0-10	0-11	0-11	0-11	1-0	1-0	1-0	1-0	1-1	1-1
90-0	1-1	1-1	1-2	1-2	1-2	1-3	1-3	1-3	1-4	1-4	1-4
100-0	1-4	1-4	1-5	1-5	1-6	1-6	1-7	1-7	1-7	1-8	1-8
110-0	1-7	1-8	1-8	1-9	1-9	1-10	1-10	1-11	2-0	2-0	2-1
120-0	1-11	1-11	2-0	2-1	2-1	2-2	2-3	2-3	2-4	2-5	2-5
130-0	2-2	2-3	2-4	2-5	2-6	2-7	2-7	2-8	2-9	2-10	2-10
140-0	2-7	2-8	2-9	2-10	2-11	2-11	3-0	3-1	3-2	3-3	3-4
150-0	2-11	3-0	3-2	3-3	3-4	3-5	3-6	3-7	3-8	3-9	3-10
160-0	3-4	3-5	3-7	3-8	3-9	3-10	4-0	4-1	4-2	4-3	4-4
170-0	3-9	3-11	4-0	4-2	4-3	4-4	4-6	4-7	4-8	4-10	4-11
180-0	4-3	4-4	4-6	4-8	4-9	4-11	5-0	5-2	5-3	5-5	5-6
190-0	4-9	4-10	5-0	5-2	5-4	5-5	5-7	5-9	5-10	6-0	6-1
200-0	5-3	5-5	5-7	5-9	5-11	6-0	6-2	6-4	6-6	6-8	6-9

RETURN WAVE METHOD (3rd Wave)

Span Length	3 Wave Time 0 F	3 Wave Time 10 F	3 Wave Time 20 F	3 Wave Time 30 F	3 Wave Time 40 F	3 Wave Time 50 F	3 Wave Time 60 F	3 Wave Time 70 F	3 Wave Time 80 F	3 Wave Time 90 F	3 Wave Time 100 F
(ft-in)	Sec.	Sec.	Sec.	Sec.	Sec.	Sec.	Sec.	Sec.	Sec.	Sec.	Sec.
70-0	2.39	2.43	2.47	2.50	2.54	2.57	2.60	2.64	2.67	2.70	2.72
80-0	2.73	2.78	2.82	2.86	2.90	2.94	2.98	3.01	3.05	3.08	3.11
90-0	3.08	3.13	3.17	3.22	3.26	3.31	3.35	3.39	3.43	3.47	3.50
100-0	3.42	3.47	3.53	3.58	3.63	3.67	3.72	3.77	3.81	3.85	3.89
110-0	3.76	3.82	3.88	3.93	3.99	4.04	4.09	4.14	4.19	4.24	4.28
120-0	4.10	4.17	4.23	4.29	4.35	4.41	4.46	4.52	4.57	4.62	4.67
130-0	4.44	4.51	4.58	4.65	4.71	4.78	4.84	4.90	4.95	5.01	5.06
140-0	4.79	4.86	4.94	5.01	5.08	5.14	5.21	5.27	5.33	5.39	5.45
150-0	5.13	5.21	5.29	5.37	5.44	5.51	5.58	5.65	5.72	5.78	5.84
160-0	5.47	5.56	5.64	5.72	5.80	5.88	5.95	6.03	6.10	6.16	6.23
170-0	5.81	5.90	6.00	6.08	6.17	6.25	6.32	6.40	6.48	6.55	6.62
180-0	6.15	6.25	6.35	6.44	6.53	6.61	6.70	6.78	6.86	6.94	7.01
190-0	6.50	6.60	6.70	6.80	6.89	6.98	7.07	7.16	7.24	7.32	7.40
200-0	6.84	6.95	7.05	7.16	7.26	7.35	7.44	7.53	7.62	7.71	7.79

TENSIONS

Horiz Tension 0 F (lbs)	Horiz Tension 10 F (lbs)	Horiz Tension 20 F (lbs)	Horiz Tension 30 F (lbs)	Horiz Tension 40 F (lbs)	Horiz Tension 50 F (lbs)	Horiz Tension 60 F (lbs)	Horiz Tension 70 F (lbs)	Horiz Tension 80 F (lbs)	Horiz Tension 90 F (lbs)	Horiz Tension 100 F (lbs)
261	253	246	239	232	226	221	215	210	206	202

P:\04023\00\DWG\RECORD\WRC\CAD\WRC-C-493.DWG

DGR ENGINEERING
ROCK RAPIDS, IOWA
(712) 472-2531

DATE	DRAWN BY	NO.	APPROVED BY	REVISION DESCRIPTION
06-20	KLV	1	PDK	CONFORMING TO CONSTRUCTION RECORDS
01-19	TWM	0	PDK	F OR CONSTRUCTION

BLACK HILLS ENERGY
WEST RAPID CITY SUBSTATION
SAG CHARTS – SUBSTATION SHIELD WIRE

DRAWN BY TWM DATE 10-18
APPROVED BY PDK DATE 10-18
DWG NO. WRC-C-493 REVISION 1

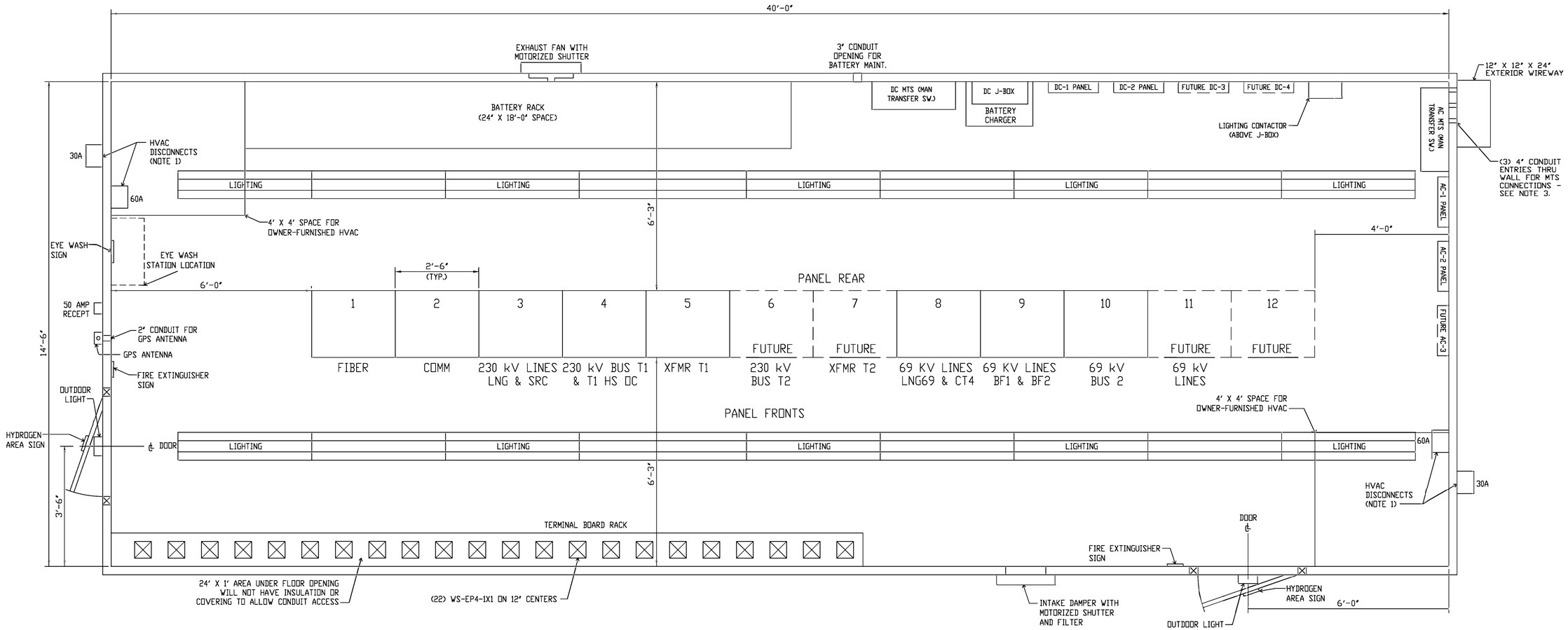

NOTES:

1. AT EACH HVAC LOCATION, PROVIDE ONE 60-AMP, 240-VAC SERVICE AND ONE 30-AMP, 240-VAC SERVICE FROM BREAKERS IN AC PANELS.
2. DETAILS ON THIS DRAWING ARE TYPICAL. SEE FINAL BUILDING DRAWINGS FROM BUILDING SUPPLIER FOR ACTUAL DETAILS (WRC-C-505 TO C-512).
3. FURNISH 8"X8" INTERIOR WIREWAY WITH REMOVABLE COVERS FROM EXTERIOR ENTRANCES TO MTS TO ALLOW FOR 500 MCM CABLE CONNECTIONS FOR (3) STATION POWER SOURCES (ONE TEMPORARY SOURCE AND TWO PERMANENT SOURCES).

(PLAN NORTH)

0 1.5 3
SCALE IN FEET

P:\04233\00\DWG\RECORD\WRC\CAD\WRC-C-500.DWG

DGR ENGINEERING
ROCK RAPIDS, IOWA
(712) 472-2531

DATE	DRAWN BY	NO.	APPROVED BY	REVISION DESCRIPTION
06-20	SMW	1	PDK	CONFORMING TO CONSTRUCTION RECORDS
01-19	SMW	0	PDK	FOR CONSTRUCTION

BLACK HILLS ENERGY
WEST RAPID CITY SUBSTATION

CONTROL ENCLOSURE
FLOOR PLAN

DRAWN BY SMW DATE 09-18
APPROVED BY PDK DATE 09-18
DWG NO. WRC-C-500 REVISION NO. 1

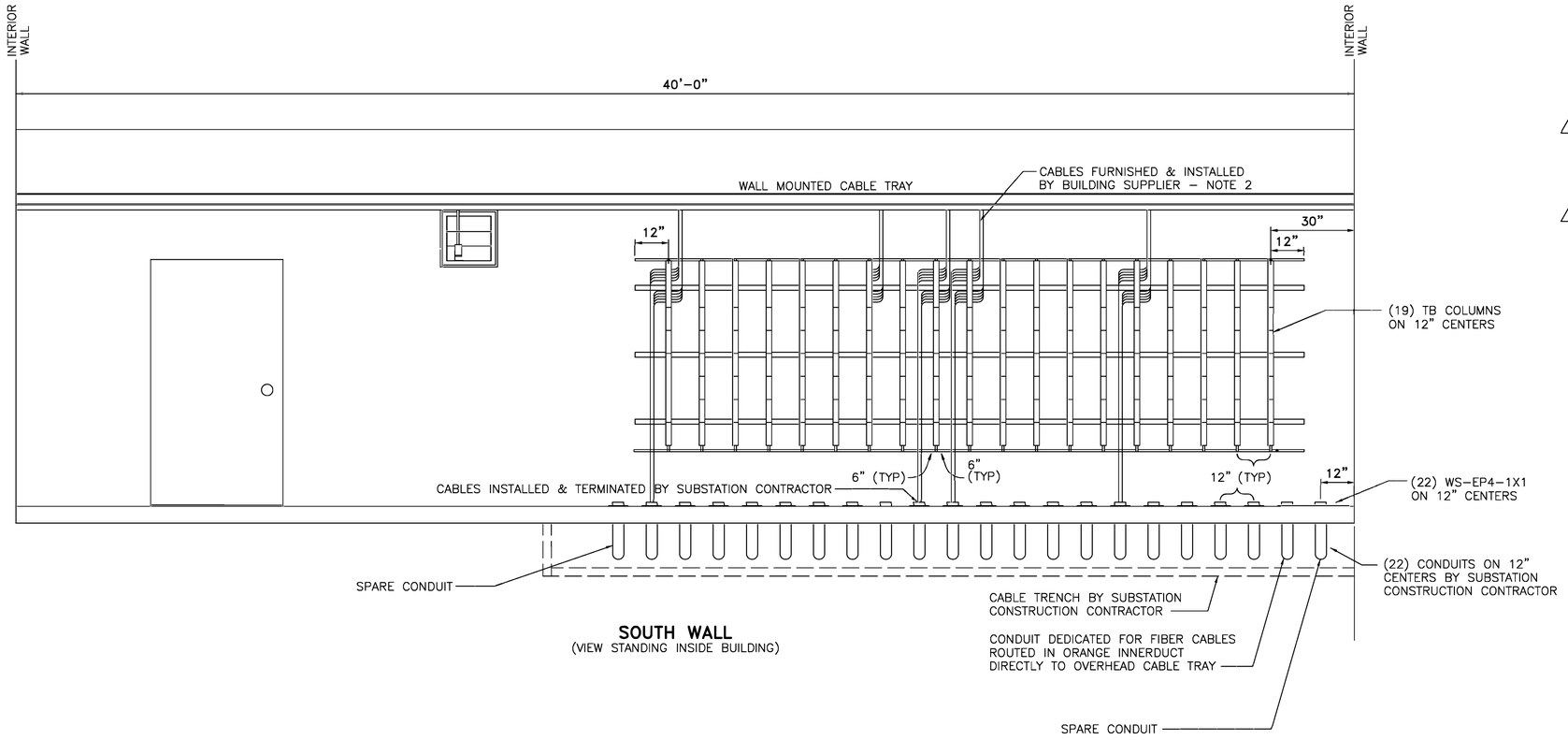

SOUTH WALL
(VIEW STANDING INSIDE BUILDING)

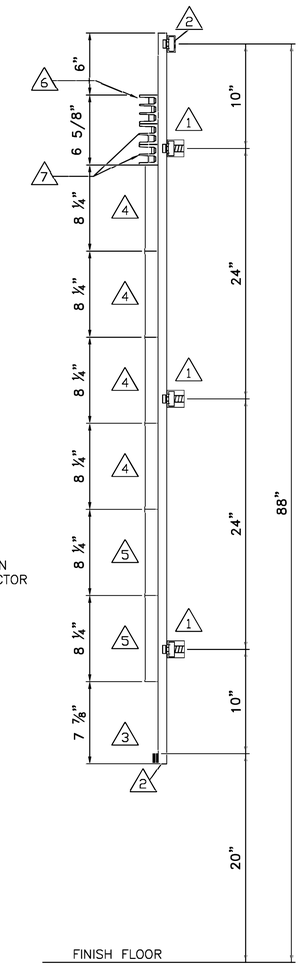

TYPICAL TB RACK SIDE VIEW
SEE WIRING DIAGRAMS FOR FINAL CONFIGURATION

1. 1 5/8" x 1 5/8" GALV. STEEL STRUT W/HOLES. B-LINE #B22
2. 1 5/8" x 13/16" GALV. STEEL STRUT W/HOLES. B-LINE #B56
3. 1/4" x 2" COPPER BUS BAR, DRILL & TAP 10/32 ON 1" CENTERS.
4. GENERAL ELECTRIC EB25B12, TOTAL (74)
5. GENERAL ELECTRIC EB27B12S, TOTAL (40)
6. MARATHON #1423123, COVER: CC 1423, TOTAL (21)
7. MARATHON #1422123, COVER: CC 1422, TOTAL (36)

NOTES:

1. DETAILS ON THIS DRAWING ARE TYPICAL. SEE FINAL BUILDING DRAWINGS FROM BUILDING SUPPLIER FOR ACTUAL DETAILS (WRC-C-505 TO C-XXX).
2. BUILDING SUPPLIER SHALL FURNISH AND INSTALL ALL TERMINAL BOARD RACKS, ALL CABLES AND ASSOCIATED TERMINATIONS INTERNAL TO THE BUILDING, AND CABLE TRAY.
3. DETAILS ON THIS DRAWING ARE DIAGRAMETIC IN NATURE AND NOT INTENDED FOR CONSTRUCTION PURPOSES.

P:\04233\00\DWG\RECORD\WRC\CAD\WRC-C-501.DWG

DGR ENGINEERING
ROCK RAPIDS, IOWA
(712) 472-2531

DATE	DRAWN BY	NO.	APPROVED BY	REVISION DESCRIPTION
06-20	KLV	1	PDK	CONFORMING TO CONSTRUCTION RECORDS
01-19	KLV	0	PDK	FOR CONSTRUCTION

BLACK HILLS ENERGY

WEST RAPID CITY SUBSTATION

CONTROL ENCLOSURE
TERMINAL BOARD RACK DETAILS

DRAWN BY KLV DATE 10-18
APPROVED BY PDK DATE 10-18
DWG NO. WRC-C-501 REVISION 1

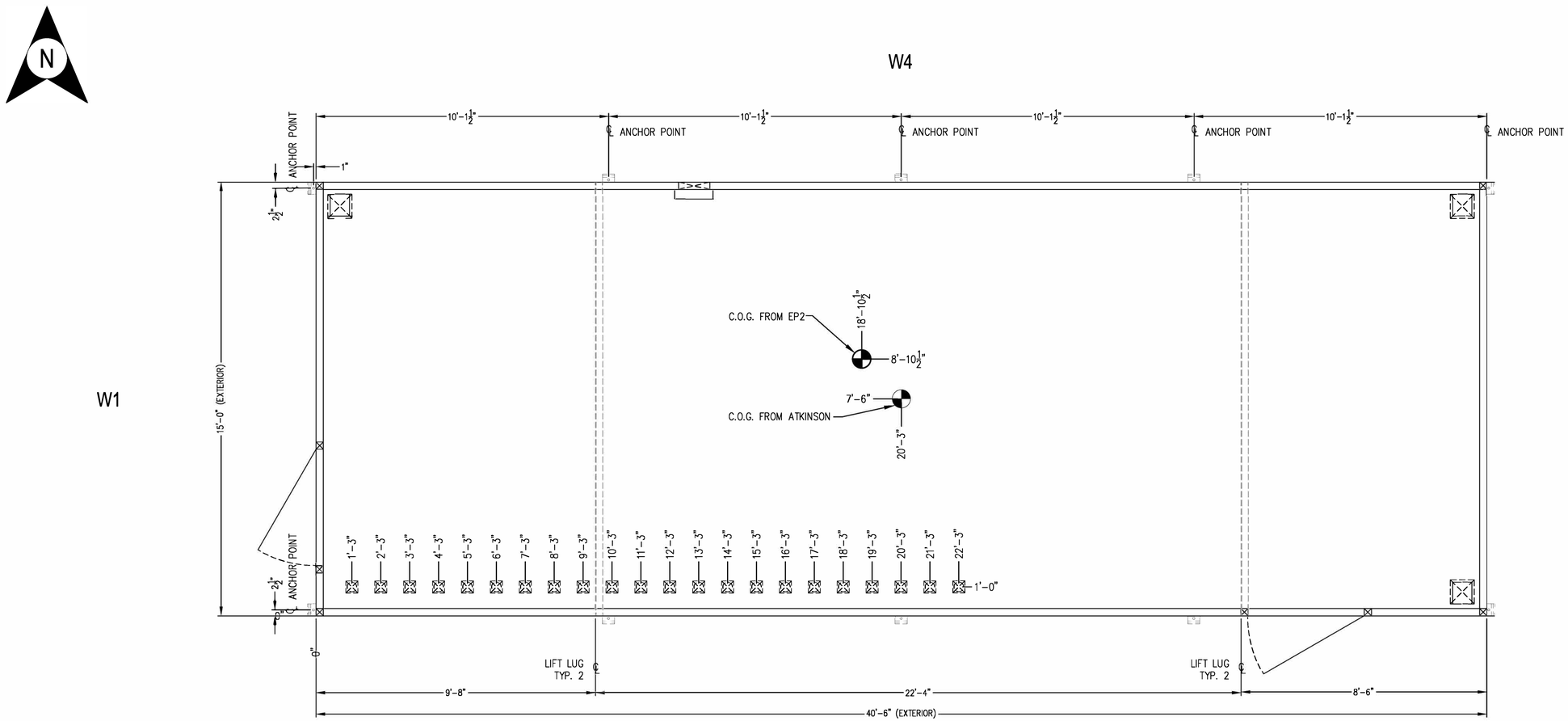

W2
FOUNDATION PLAN

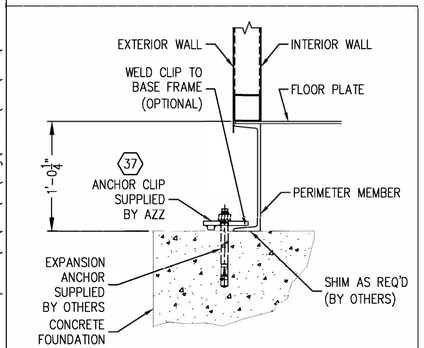

RECOMMENDED ANCHORING METHOD

SCALE: 1 1/2"=1'-0"

NOTES:

1. USE THIS DRAWING IN CONJUNCTION WITH ATKINSON DRAWINGS WRC-C-506 AND WRC-C-507 AND THE OUTLINE-LEGEND/DESIGN CRITERIA/BILL OF MATERIALS.
2. SEE OUTLINE LEGEND FOR PAINT SPECIFICATION, ITEM DESCRIPTION, AND DESIGN CRITERIA.
3. POWER CENTER TO BE SUPPORTED ON CONCRETE PAD.
4. ANCHOR CLIPS PROVIDED BY AZZ/BOLTS PROVIDED BY OTHERS PIER ELEVATION TOLERANCE ±1/8".
5. THE BASE FRAME STRUCTURE SHALL BE SUPPORTED FROM THE FOUNDATION AT ALL ANCHORING LOCATIONS AROUND THE PERIMETER. ON ENCLOSURES WITH LENGTHWISE SHIPPING SPLITS, SUPPORTS ARE REQUIRED ALONG THE SHIPPING SPLIT SUPPORTING BOTH BASE FRAMES AND SHALL BE LOCATED AT THE SAME SPACING AS PERIMETER SUPPORTS AND AT INTERSECTIONS OF ENCLOSURE SHIPPING SECTIONS.
6. DEPTH AND DIAMETER OF PIERS DETERMINED BY OTHERS ACCORDING TO LOCAL SOIL CONDITIONS.
7. ESTIMATED WEIGHT AS SHIPPED FROM AZZ: 29,478 POUNDS
   ESTIMATED WEIGHT AS SHIPPED FROM EP2: 48,028 POUNDS
   (MINUS CUSTOMER INSTALLED EQUIPMENT AT JOB SITE)
8. CENTER OF GRAVITY AS SHIPPED FROM AZZ: X = 20'-3" Y = 7'-6".
   CENTER OF GRAVITY AS SHIPPED FROM EP2: X = 18'-10 1/2" Y = 8'-10 1/2".
   (MINUS CUSTOMER INSTALLED EQUIPMENT AT JOB SITE)
9. POWER CENTER SHOULD BE OFF-LOADED WITH CRANE USING SPREADER BARS AND RIGGING PROVIDED BY OTHERS.
10. DIMENSIONS DENOTED WITH AN ASTERISK ARE ALLOWED A VARIANCE OF ± 2" HORIZONTAL AND ± 1/4" VERTICAL.
11. TOLERANCE IS ± 1/4" UNLESS OTHERWISE NOTED.

CUSTOMER PO#: 10292-168338

DATE	DRAWN BY	NO.	APPROVED BY	REVISION DESCRIPTION
06-20	SMV	1	PDK	CONFORMING TO CONSTRUCTION RECORDS
06-20	SMV	0	PDK	WAS DWG 2014323-00, REV. 0

BLACK HILLS ENERGY

WEST RAPID CITY SUBSTATION

CONTROL ENCLOSURE FOUNDATION PLAN

DRAWN BY FR/AZZ DATE 4/8/19
APPROVED BY LS/AZZ DATE 4/8/19

DWG NO. WRC-C-505 REVISION 1

Jun 15, 2020 - 2:53pm P:\04\233\00\Dwg\Record\WRC\CAD\WRC-C-505.dwg

W4

W1

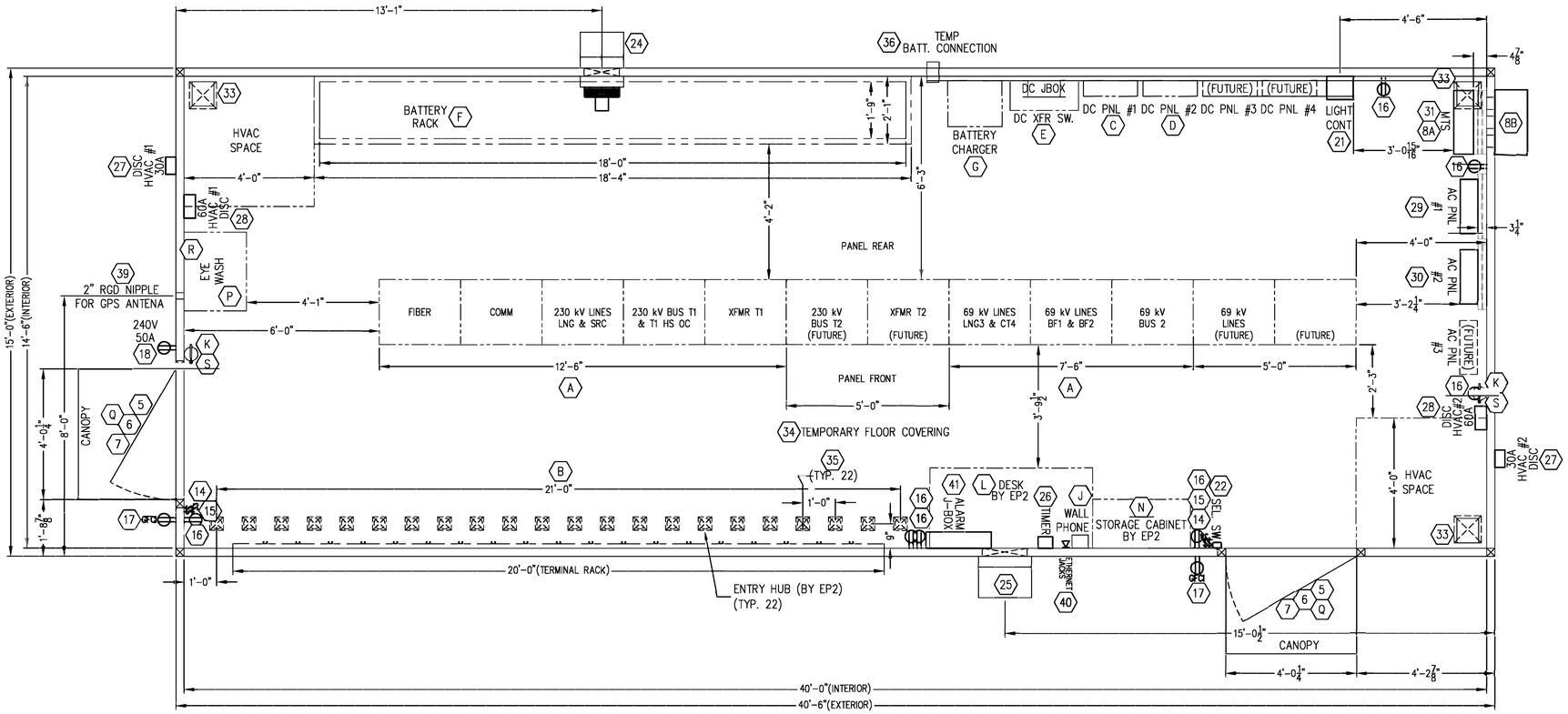

W3

W2

OUTLINE PLAN

(VIEWED WITH CEILING REMOVED)

NOTES:

1. USE THIS DRAWING IN CONJUNCTION WITH ATKINSON DRAWINGS WRC-C-505 AND WRC-C-507 AND THE OUTLINE-LEGEND/DESIGN CRITERIA/BILL OF MATERIALS.
2. SEE OUTLINE LEGEND FOR PAINT SPECIFICATION, ITEM DESCRIPTION, AND DESIGN CRITERIA.
3. DIMENSIONS DENOTED WITH AN ASTERISK ARE ALLOWED A VARIANCE OF ± 2" HORIZONTAL AND ± 1/4" VERTICAL.
4. TOLERANCE IS ± 1/4" UNLESS OTHERWISE NOTED.

CUSTOMER PO#: 10292-168338

DATE	DRAWN BY	NO.	APPROVED BY	REVISION DESCRIPTION
06-20	SMW	1	PDK	CONFORMING TO CONSTRUCTION RECORDS
06-20	SMW	0	PDK	WAS DWG 2014323-01, REV. 0

BLACK HILLS ENERGY

WEST RAPID CITY SUBSTATION

CONTROL ENCLOSURE OUTLINE PLAN

DRAWN BY FR/AZZ DATE 4/8/19

APPROVED BY LS/AZZ DATE 4/8/19

DWG NO. WRC-C-506 REVISION 1

Jun 15, 2020 - 2:55pm P:\04\233\00\Dwg\Record\WRC\CAD\WRC-C-506.dwg

W4

W1

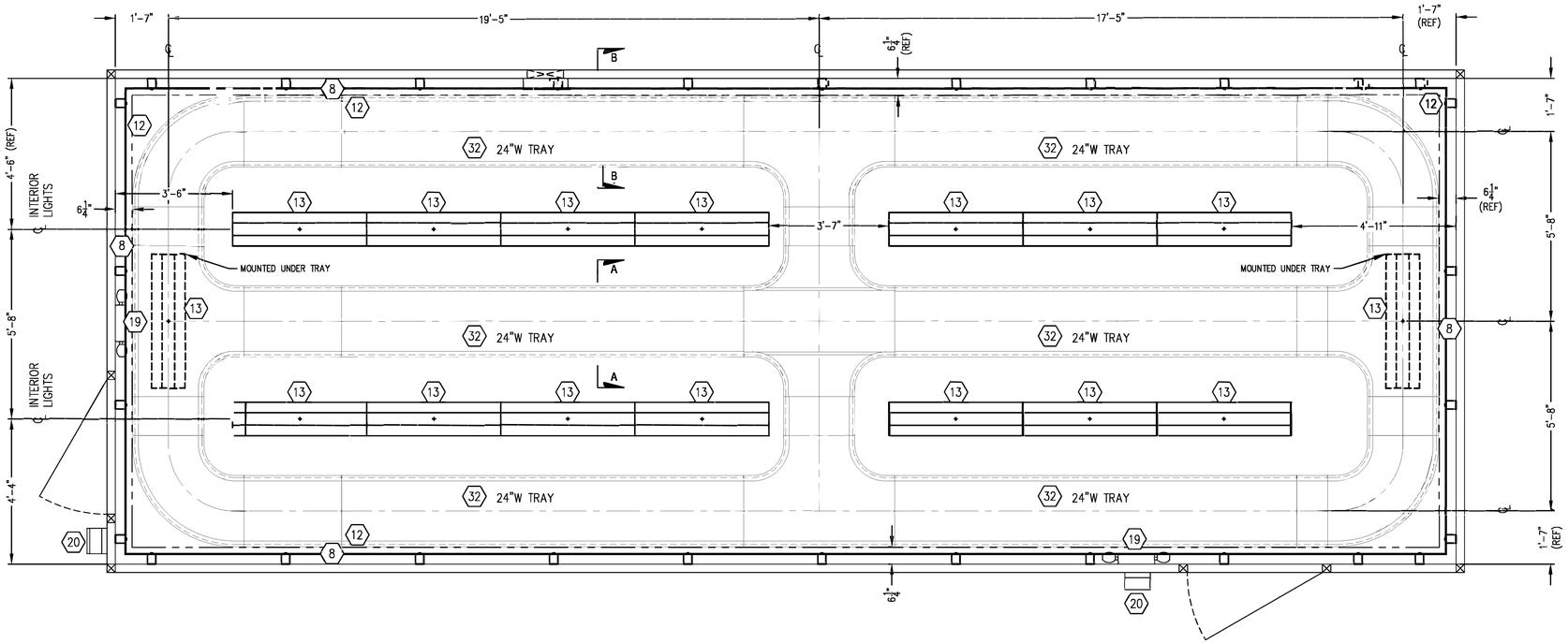

W3

W2
CEILING PLAN
(VIEWED WITH ROOF REMOVED)

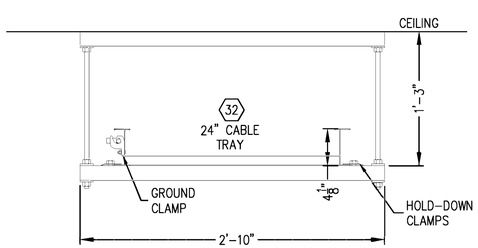

SECTION A-A
CABLE TRAY SUPPORTS FASTENED TO ROOF TRUSSES SPACED AT 8'-0" C/C APPROX.

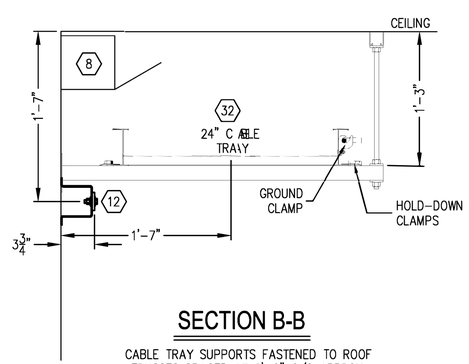

SECTION B-B
CABLE TRAY SUPPORTS FASTENED TO ROOF TRUSSES SPACED AT 8'-0" C/C APPROX.

SEE DWG WRC-C-505 & 506 FOR NOTES.

CUSTOMER PO#: 10292-168338

DATE	DRAWN BY	NO.	APPROVED BY	REVISION DESCRIPTION
06-20	SMV	1	PDK	CONFORMING TO CONSTRUCTION RECORDS
06-20	SMV	0	PDK	WAS DWG 2014323-02, REV. 0

BLACK HILLS ENERGY

WEST RAPID CITY SUBSTATION

CONTROL ENCLOSURE CEILING PLAN

DRAWN BY FR/AZZ DATE 4/8/19
APPROVED BY LS/AZZ DATE 4/8/19
DWG NO. WRC-C-507 REVISION 1

Jun 15, 2020 – 2:56pm P:\04\233\00\Dwg\Record\WRC\CAD\WRC-C-507.dwg

W4

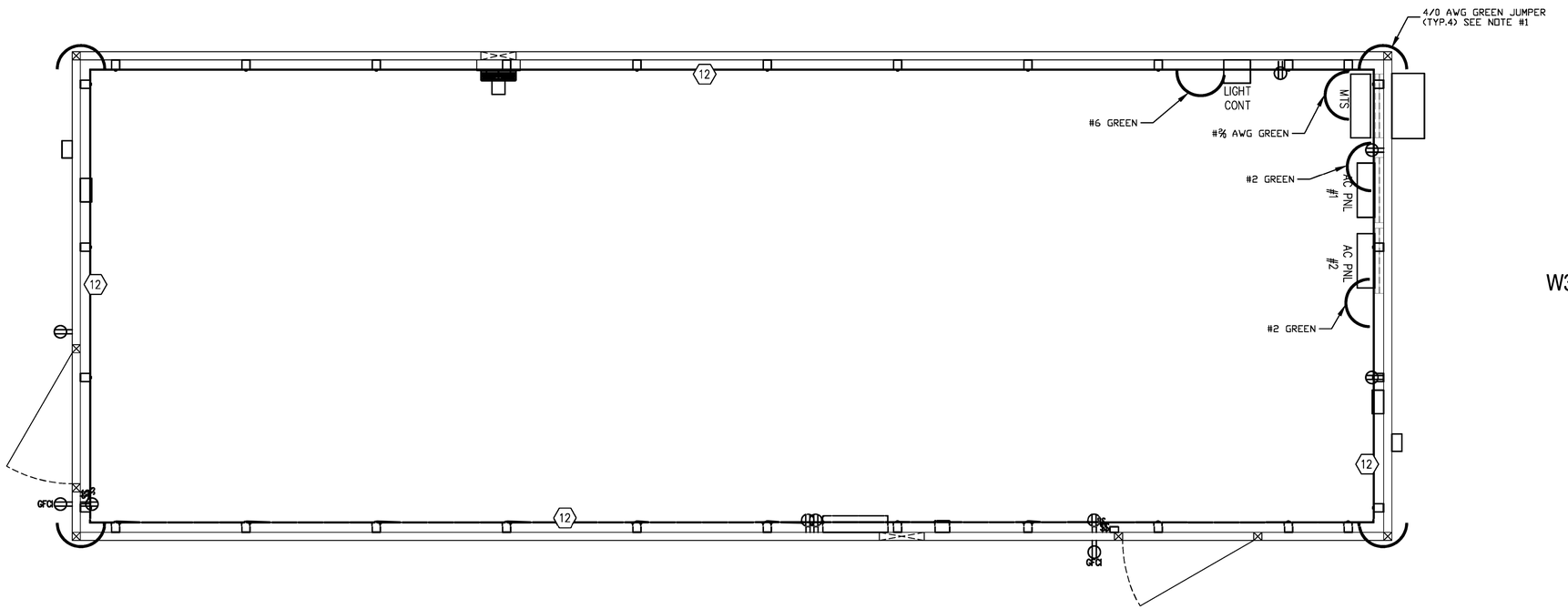

W1

W3

W2

GROUNDING PLAN

1. INTERIOR GROUND BUS IS GROUNDED THROUGH FLOOR TO EXTERIOR GROUND PADS WITH 4/0 AWG GREEN COPPER WIRE.
2. ALL EQUIPMENT IS GROUNDED AS SHOWN ON DRAWING.
3. ALL TRANSFORMERS (IF REQUIRED) TO BE BONDED TO BUILDING GROUND BUS.
4. 4/0 AWG BARE COPPER WIRE ROUTED THROUGHOUT CABLE TRAY (IF REQUIRED).
5. ALL GROUNDS TO BE STRANDED COPPER WIRE MECHANICALLY CONNECTED TO GROUND BUS.

SEE DWG WRC-C-505 & 506 FOR NOTES.

CUSTOMER PO#: 10292-168338

DATE	DRAWN BY	NO.	APPROVED BY	REVISION DESCRIPTION
06-20	SMW	1	PDK	CONFORMING TO CONSTRUCTION RECORDS
06-20	SMW	0	PDK	WAS DWG 2014323-04, REV. 0

BLACK HILLS ENERGY

WEST RAPID CITY SUBSTATION

CONTROL ENCLOSURE
GROUNDING PLAN

DRAWN BY FR/AZZ DATE 4/8/19
APPROVED BY LS/AZZ DATE 4/8/19
DWG NO. WRC-C-508
REVISION 1 NO.

Jun 15, 2020 - 2:58pm P:\04\233\00\Dwg\Record\WRC\CAD\WRC-C-508.dwg

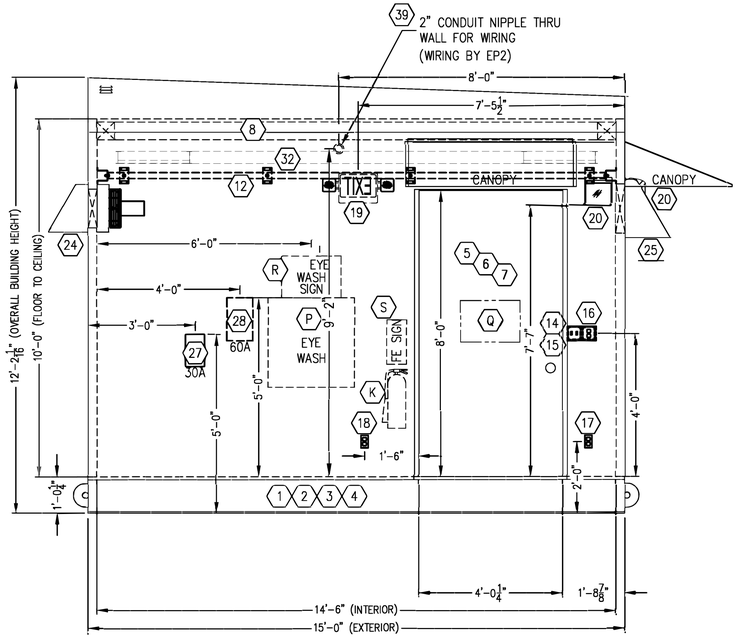

END WALL ELEVATION W1

(VIEWED FROM OUTSIDE)

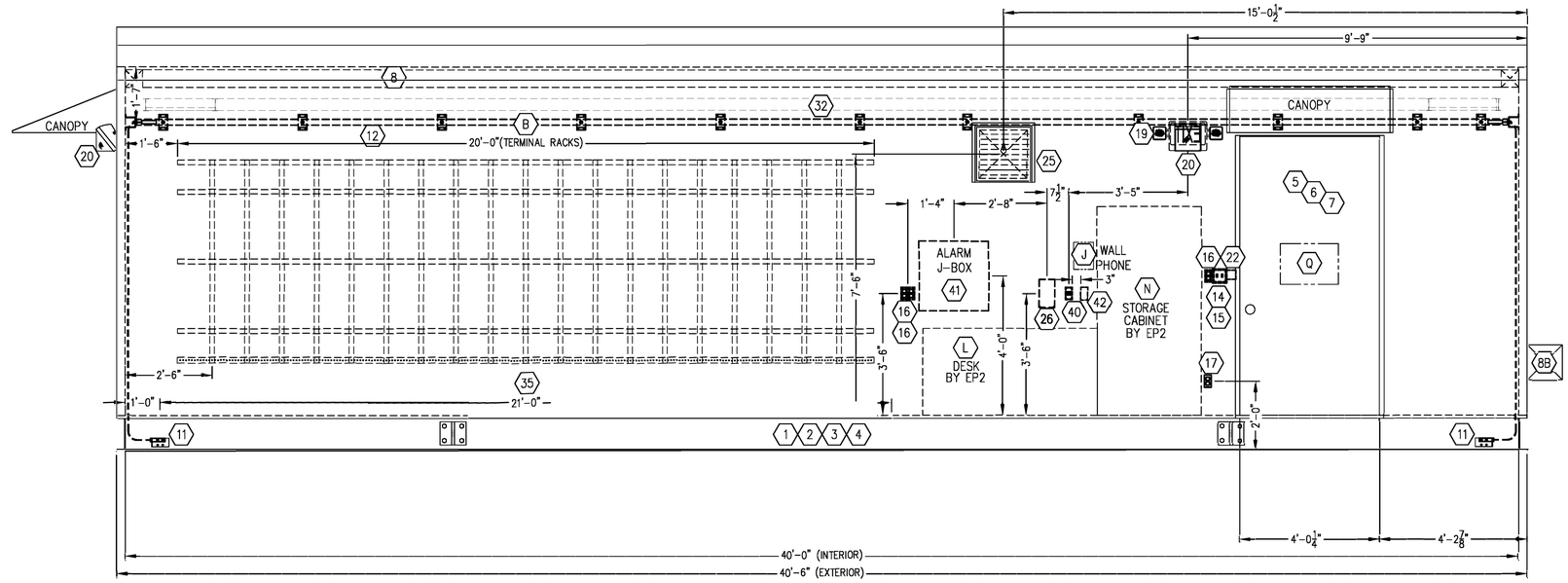

SIDE WALL ELEVATION W2

(VIEWED FROM OUTSIDE)

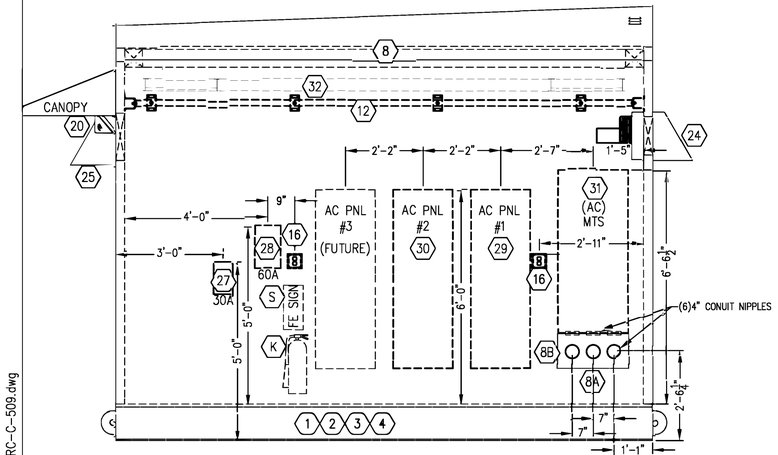

END WALL ELEVATION W3

(VIEWED FROM OUTSIDE)

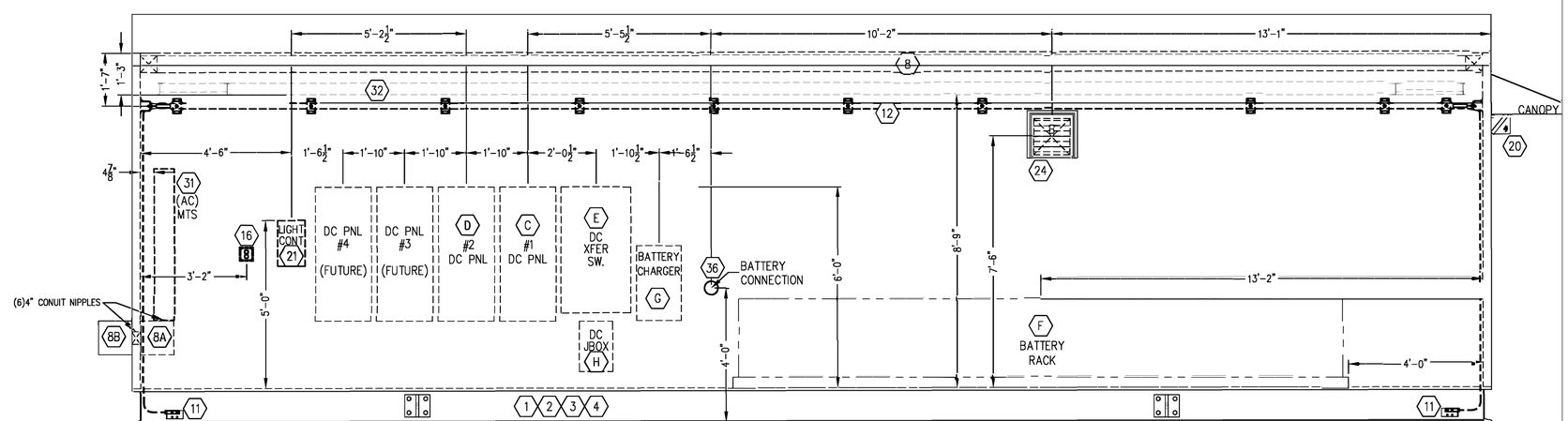

SIDE WALL ELEVATION W4

(VIEWED FROM OUTSIDE)

SEE DWG WRC-C-505 & 506 FOR NOTES.

CUSTOMER PO#: 10292-168338

DATE	DRAWN BY	NO.	APPROVED BY	REVISION DESCRIPTION
06-20	SMW	1	PDK	CONFORMING TO CONSTRUCTION RECORDS
06-20	SMW	0	PDK	WAS DWG 2014323-03, REV. 0

BLACK HILLS ENERGY

WEST RAPID CITY SUBSTATION

CONTROL ENCLOSURE ELEVATIONS

DRAWN BY FR/AZZ DATE 4/8/19

APPROVED BY LS/AZZ DATE 4/8/19

DWG NO. WRC-C-509 REVISION NO. 1

Jun 20, 2020 - 12:42pm P:\04\233\00\Dwg\Record\WRC\CAD\WRC-C-509.dwg

SUGGESTED METHOD OF OFF-LOADING POWER CENTER

1. USE A SPREADER BAR THAT IS A MINIMUM OF 2 FT LONGER THAN THE WIDTH OF THE ENCLOSURE.
2. UTILIZE EQUAL LENGTHS OF WIRE ROPE FOR THE LOWER SLINGS.
3. SEE DRAWING FOR MAXIMUM SLING ANGLES.
4. REFER TO THE END WALL AND SIDE WALL VIEWS FOR CENTER OF GRAVITY.
   GROSS WEIGHT OF UNIT AS SHIPPED FROM AZZ - 29,478 LBS.
   GROSS WEIGHT OF UNIT AS SHIPPED FROM EP2 - 48,028 LBS.
5. ADJUST HOOK TO COMPENSATE FOR THE CENTER OF GRAVITY.

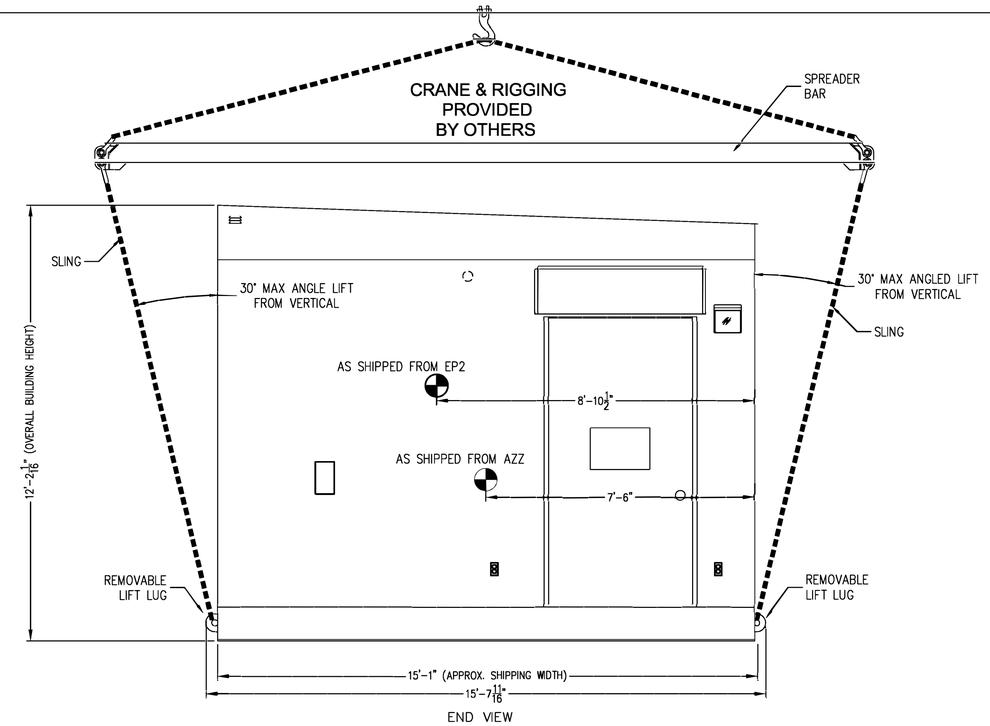

END VIEW

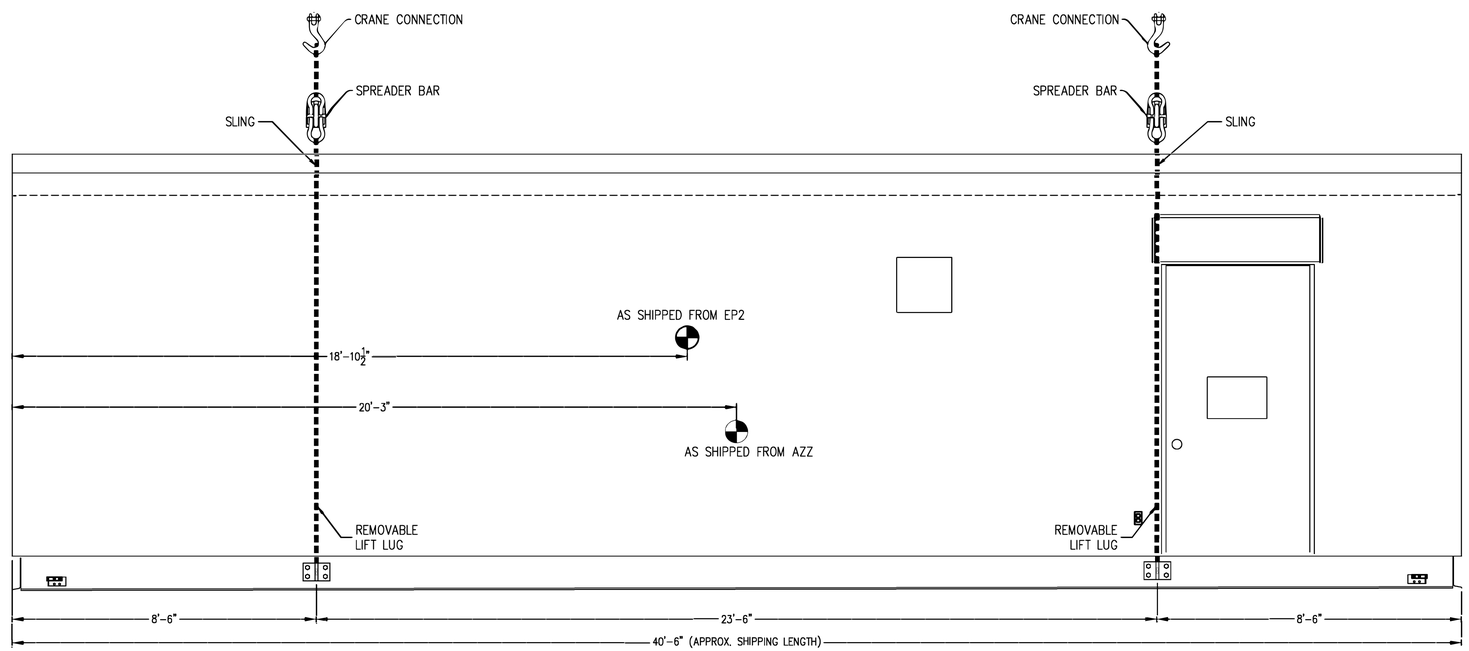

SIDE VIEW

CUSTOMER PO#: 10292-168338

DATE	DRAWN BY	NO.	APPROVED BY	REVISION DESCRIPTION
06-20	SMW	1	PDK	CONFORMING TO CONSTRUCTION RECORDS
0 6-20	SMW	0	PDK	WAS DWG 2014323-L1, REV. 0

BLACK HILLS ENERGY

WEST RAPID CITY SUBSTATION

CONTROL ENCLOSURE LIFTING INSTRUCTIONS

DRAWN BY FR/AZZ DATE 4/8/19
APPROVED BY LS/AZZ DATE 4/8/19
DWG NO. WRC-C-510 SHEET 1 OF 1

Jun 08 2020 - 3:55pm P:\04\233\00\Dwg\Record\WRC\CAD\WRC-C-510.dwg

BILLS OF MATERIAL
L2014323r2.xlsm

Shop Order:	**2014323**	-
Equipment:	**AZZ RuggedSpec**	-
Project Engineer:	**Franklin Roberts**	-
Customer:	**EP2** **4240 ARMY POST ROAD** **DES MOINES, IA 50321**	- -
Project:	**BLACK HILLS POWER - WEST RAPID CITY SUBSTATION** **409 DEADWOOD AVENUE** **RAPID CITY, SD 57702**	- -

Customer PO #: 10292-168338
Ref. AZZ Drawing Series: **D-2014323-01, D-2014323-02**

Power Center

Length	Width	Floor to Ceiling Height	Overall Height
NOTE ADD 1" FOR SINGLE SLOPE OR 2" FOR GABLE FOR OVERALL SHIPPING WIDTH			
40'-6"	**15'-0"**	**10'-0"**	**12'-2 1/8"**

REVISIONS

REV	DATE	DESCRIPTION
0	4/9/2019	ISSUED FOR CONSTRUCTION
1	6/8/2019	ITEMS 1, 18, 24, 29, 30, 40, 41; BLDG HEIGHT & WEIGHT
2	6/28/2019	ITEM 24

PROJECT IS APPROVED FOR CONSTRUCTION

REL

Design Criteria:

Seismic (IBC2015):	**Ss=0.123**	**S1=0.042**
Area Classification:	**NON-HAZARDOUS**	
Roof Load (DL+LL):	**85 PSF**	
Floor Load (DL+LL):	**250 PSF**	
Wall/Wind Load:	**125 MPH**	
Enclosure Weight (Minus Equipment):	**29478 LBS.**	
Enclosure Weight Including Installed Equipment (As Shipped from AZZ):	**29478 LBS.**	
Enclosure Weight Including Installed Equipment (As Shipped from EP2):	**48028 LBS.**	
Center of Gravity Below is from the corner of Wall W1 & W2		
CG (As Shipped from AZZ): X=20'-3"	**Y=7'-6"**	
CG (As Shipped from EP2): X=18'-10 1/2"	**Y=6'-10 1/2"**	

L2014323r2.xlsm

BILLS OF MATERIAL
L2014323r2.xlsm

ITEM No.	DEPT No.	ATK. P/N P/N	QTY	UNITS	DESCRIPTION
1					**BASE STRUCTURE**
	20	20421	140	FT	BASE PERIMETER & LIFTING MEMBERS: CHANNEL (C12 X 20.7#) GRADE 50 A572
	20	20417	165	FT	BASE CROSS MEMBERS: CHANNEL (C10 X 15.3#) GRADE 50 A572
	20	20011	243	FT	STRINGERS: ANGLES (2" X 3" X 3/16")
	20	20133	-	EA	FLOOR OPENING FRAMING: BENT 12 GA. CHANNEL
	20	12845	70	FT	FLAT BAR (EQUIPMENT ATTACHMENT): 1/4"T X 4"W HR FLAT BAR
	20	20077	2	PC	FLOOR PLATE: 7 FT X 14" X 20 FT - A36, STP MIL PLT
	20	20078	2	PC	FLOOR PLATE: 8 FT X 14" X 20 FT - A36, STP MIL PLT
					REMOVABLE LIFT LUG (25K LBS CAPACITY):
	20	40302	4	EA	REMOVABLE LIFT LUGS (STRAIGHT LIFT): (4) PLATE WELDMENTS A572 GRADE 50, 3/4" AND 1" THICK PLATES, EACH FASTENED TO THE BASE PERIMETER MEMBER WITH FOUR (4) 7/8" DIA. ASTM A490 BOLTS, FLAT WASHERS, NUTS ARE WELDED TO BACKING PLATE WELDED ON INSIDE WEB OF PERIMETER MEMBER
					WALL STRUCTURE 10.0 FT HIGH
					EXTERIOR WALL PANS - 23.5"W - 32"W SHEETS
	30	00001-120.75	55	EA	EXTERIOR WALLS: BOLTED FORMED GALVANEALED STEEL - ASTM A653-11, CS, TYPE B PANELS (16 GA X 120.75"), BUTYL SEALED
	30	40057A	11	EA	TUBE WRAP Z-BRACKET: 12 GA. Z-BRACKET 5 7/8"W X 10'-0"L
	30	00002-119.75	28	EA	INTERIOR WALLS: FORMED GALVANEALED STEEL - ASTM A653-11, CS, TYPE B PANELS (16 GA) (120"H)
					ROOF STRUCTURE FULL SEAM WELDED SINGLE SLOPE 2"
					TOTAL TRUSS REQUIRED = 20
	40	20114	5	PC	ROOF TRUSS: FORMED HOT ROLLED STEEL - A1011 CS-TYPE B SECTIONS (10 GA.) - 2" SINGLE SLOPE LOW END OS 7.25" HIGH END OS 13.503" - 179"LG
	40	00001-178	20	EA	**CEILING: FORMED GALVANEALED STEEL - ASTM A653-11, CS, TYPE B SECTIONS (16 GA) (178")**
					SEAL BETWEEN EACH CEILING PAN AND BETWEEN CEILING AND TOP TUBE
	70	10673	5	RL	PANELASTIC TC95
	40	20148	1	PC	**ROOF END CAPS: FORMED GALVANEALED STEEL - ASTM A653-11, CS, TYPE B SHEETS (12 GA) (180")**
					OVERHANG 1" ON LOW END OF ROOF
	40	20147	2	PC	**ROOF SIDE CAPS: FORMED GALVANEALED STEEL - ASTM A653-11, CS, TYPE B SHEETS (12 GA) (168")**
	40	20148	10	PC	**ROOF PANEL: FLAT GALVANEALED STEEL - ASTM A653-11, CS, TYPE B SHEETS (12 GA) (180.1)**
	40	20016	3	EA	**ROOF LASHING D-RING: FORGED LASHING RING 5000 LBS CAPACITY - GRAINGER #3LLP9**
					STRUCTURAL FRAMING (WALLS)
	30	20160	192	FT	SQUARE STEEL TUBE. (3" X 3" X 11 GA. - A500)
2					**SURFACE COATINGS:**
					SURFACE PREPARATION: BASE STEEL AND FLOOR PLATE SHALL BE POWER TOOL CLEANED PER SSPC-SP3
	20	30057	2	GAL	**EXTERIOR BASE STRUCTURE: APPLY GRAY SHERWIN WILLIAMS 2.8 VOC CATALYZED EPOXY PRIMER** (1.8 TO 2.2 MDFT AVERAGE READING);
	20	29994	11	GAL	**BELOW BASE AFTER INSULATION IS INSTALLED: APPLY ONE COAT BLACK SHERWIN WILLIAMS DURA-PLATE 235 EPOXY PHENALKAMINE (8.0 TO 16.0 MDFT AVERAGE READING);**
	50	30028	2	GAL	**TOP OF FLOOR PLATE FINAL COAT WITH SHERWIN-WILLIAMS #S62 W7 111 EXTRA WHITE TILE-CLAD HS EPOXY, TINTED ANSI 70 GRAY NON-SKID FLOOR COATING (5 MWFT AVERAGE READING)**
	30	30041	13	GAL	**INTERIOR WALLS & CEILING: APPLY EXTRA WHITE SHERWIN WILLIAMS SPRAYLASTIC SEMI-GLOSS WATERBORNE DRYFALL #B42W17 (2.0 TO 4.0 MDFT AVERAGE READING)**
	50	30051	10	GAL	EXTERIOR: SSPC-SP1 CLEAN SURFACE WITH ACETONE/MEK – THEN APPLY FINISH COAT ANSI 70 LIGHT GRAY SHERWIN WILLIAMS ACROLON 218 HS, 165W00610WE ACRYLIC POLYURETHANE GLOSS (3 TO 6 MDFT AVERAGE READING)
	70	30028	1	QT	**TOUCH-UP PAINT - FLOOR NON-SKID PAINT**
	70	29994	1	QT	**TOUCH-UP PAINT - UNDERCOAT**
	70	30041	1	QT	**TOUCH-UP PAINT - INTERIOR**
	70	30051	1	QT	**TOUCH-UP PAINT - EXTERIOR**
3				A/R	EXTERIOR HARDWARE: (AS REQUIRED) CORROSION RESISTANT ZINC PLATED AND DULL CHROME PLATED STEEL
4	30				**THERMAL INSULATION:**
					PROSEAL 11-033 IS A 2 COMPONENT SELF ADHERING SPRAY APPLIED RIGID POLYURETHANE FOAM SYSTEM FLAMMABILITY FLAME SPREAD ≤25 SMOKE DEV ≤450 ASTM E-84
	20	23449	34	GAL	FLOOR - 3"THK R19 (R22.35 (U0.045) BASE SYSTEM) INSULATION PROSEAL SPRAY FOAM SYSTEM #11-033
	30	-	-	-	FLOOR INSULATION COVER NOT REQUIRED
	30	10600	18	RLS	WALLS – 3 ½" FIBERGLASS INSULATION (R13) (R13.85 U.07 WALL SYSTEM)
	40	10600	10	RL	CEILING – 3 ½" FIBERGLASS INSULATION (R13) (R13.85 U.07 ROOF SYSTEM)

BILLS OF MATERIAL
L2014323r2.xlsm

5					**DOOR (ENTRY/EXIT)**
	30	24713	2	EA	4'-0" X 8'-0" HEAVY DUTY 16 GA STEEL REINFORCED FOR CLOSURE AND EXIT DEVICE POLYSTYRENE CORE R15 FIRE RATED 1 1/2 HOUR CLASS B FOUR (4) HINGE PREPS
	30	10561A	8	EA	FOUR (4) SAFETY STUD STAINLESS STEEL BALL BEARING TYPE HINGES PER DOOR
	30	10564	6	EA	WEATHER SEALS
	30	10563	40	FT	ALUMINUM EXTRUSIONS
	30	10553	4	FT	BUMPER TYPE ALUMINUM THRESHOLD
	70	20131	2	EA	AZZ FABRICATED CANOPY 16GA - 48" X 36"
	30	10592	2	EA	CHROME DOOR PULL
6					**PANIC HARDWARE:**
	30	16376	2	EA	* LOW PROFILE RIM EXIT DESIGN - STAINLESS STEEL - RUSSWIN #ED5200-630
	30	16377	2	EA	* THUMB LATCH OUTSIDE TRIM STAINLESS STEEL – RUSSWIN #TH955
	30	10541	2	EA	* CYLINDER LOCK – BEST #1E72-626
	30	10543	2	EA	* REMOVABLE BEST CORE KEYED ALIKE - BEST #AC7A1-626
					****COMPLIES WITH UL 305 STANDARDS****
7					**AUTOMATIC DOOR CLOSER (ENTRY/EXIT):**
	30	10539	2	EA	HEAVY DUTY SURFACE MOUNTED - REVERSIBLE WITH HOLD OPEN FEATURE - BRUSHED ALUMINUM FINISH - ASSA ABLOY ARROW DCL6020
8					**WIREWAY:NEMA-1 STEEL 6" X 6" WIREWAY - HINGED COVER - SURFACE**
					MOUNTED AROUND INTERIOR PERIMETER OF POWER CENTER NEAR CEILING
	60	10783	110	FT	STRAIGHT SECTION 10'-0"LG
	60	10847	16	EA	CONNECTOR
	60	10848	4	EA	ELBOW
8A					**WIREWAY: NEMA-1 STEEL 12" X 12" WIREWAY - HINGED COVER - SURFACE**
	60	24664	1	EA	STRAIGHT SECTION 10'-0"LG
	60	10723	2	EA	END CAP
8B					**WIREWAY: NEMA-3R STEEL 12" X 12" WIREWAY - DRIP SHIELD - REMOVABLE COVER**
	60	24892	1	EA	NEMA 3R 12 X 12 X 24 WIREWAY, HOFFMAN #F121224RTGV
					****SHOP TO INSTALL (3) 4" RGD CONDUIT NIPPLES THRU NEMA 3R 12X12 WIREWAY ON EXTERIOR WALL TO INTERIOR 12X12 WIREWAY & INSTALL (3) 4" NIPPLES FROM WIREWAY TO MTS****
					SEE DRAWING D-2014323-03
9					**CONDUIT: EMT GALVANIZED STEEL WITH COMPRESSION FITTINGS - SURFACE MOUNTED TO INTERIOR WALLS**
					ALL CONDUITS TO HAVE PLASTIC BUSHINGS ON BOTH ENDS
					CONDUITS BELOW CABLE TRAY REQUIRE GROUNDING BUSHINGS ON TOP END
	60	STK	6	EA	4" R.G.S NIPPLE
	60	STK	12	EA	4" LOCK RING
	60	70484	12	EA	4" PLASTIC BUSHING
10					**WIRE: ALL WIRING FOR UTILITY CIRCUITS WILL BE 600V XHHW-2 SINGLE CONDUCTOR STRANDED – COPPER ONLY – MINIMUM WIRE SIZE IS #12 AWG EXCEPT FOR HVAC THERMOSTAT CIRCUITS – ALL WIRES SHALL HAVE THERMATAB WIRE MARKERS AT EACH END**
					COMPRESSION TYPE RING LUGS TO BE USED EXCEPT FOR COMPRESSION TYPE LOCKING SPADE CONNECTORS TO BE USED ON SWITCHES. RECEPTACLES AND GFCI RECEPTACLES ONLY - ALL LUGS ATTACHED TO WIRE USING RATCHET CRIMPER:
11	60	40229	4	EA	GROUND PAD: 1/4" X 3" X 6" A304 STAINLESS STEEL BENT BUS (USE 1/4" X 3" X 6" SS FLAT BAR) - NEMA 4-HOLE PATTERN - CONNECTED TO INTERIOR GROUND BUS USING #4/0 AWG GREEN INSULATED COPPER WIRE ROUTED THROUGH HOLE IN FLOOR AND 1" DIA. HOLE IN BASE PERIMETER - EQUIPMENT GROUND BUS AND ENCLOSURE CONTAINING ELECTRICAL DEVICES MUST BE CONNECTED AS REQUIRED UTILIZING COMPRESSION CONNECTORS
	60	15843	50	FT	* #4/0 AWG GREEN INSULATED COPPER WIRE
	60	STK	16	EA	* 3/8-16 UNC X 1"L WITH FLAT & LOCK WASHERS STAINLESS STEEL HARDWARE
12					INTERIOR GROUND BUS: 1/4" X 2" COPPER BAR MOUNTED ON BENT ALUMINUM PLATE STANDOFFS ROUTED AROUND PERIMETER OF INTERIOR WALLS AS SHOWN ON ELEVATION DRAWING - CONNECTED TO THE (4) EXTERIOR GROUND PADS - ALL INTERIOR GROUNDS TO BE BOLTED TO BUS - SEE GROUNDING PLAN DRAWING;
	60	10509	4	EA	* COPPER BUS CORNER SPLICE SECTIONS
	60	10508	10	EA	* COPPER BUS STRAIGHT SPLICE SECTIONS
	60	31999	55	EA	* BUS STANDOFF 3"W X 3 1/2"D X 1/8"T ALUMINUM 3003-H14 SEE ATK-593

BILLS OF MATERIAL
L2014323r2.xlsm

13					INTERIOR LIGHTING: FLUORESCENT LIGHT FIXTURE - EACH WITH TWO 32W 4 FT 120VAC LAMPS - INDUSTRIAL GRADE WITH WRAP AROUND ACRYLIC DIFFUSER;
	60	10870	16	EA	**LIGHT FIXTURE - WILLIAMS #17-4-232-A-EB2AD/UNV**
	70	10861	32	EA	FLUORESCENT LAMP: COOL WHITE - INSTANT START - T8 BULB - MEDIUM BI-PIN
14					LIGHT SWITCH(INTERIOR LIGHTS): THREE-WAY - 20 AMP - 120VAC - SPECIFICATION GRADE, HUBBELL #CS320-GY-GRAY
	60	19679	2	EA	****MOUNTED 48" ABOVE FINISHED FLOOR****
15					LIGHT SWITCH (EXTERIOR LIGHTS): THREE-WAY - 20 AMP - 120VAC - SPECIFICATION GRADE, HUBBELL #CS320-GY-GRAY
	60	19679	2	EA	****MOUNTED 48" ABOVE FINISHED FLOOR****
16					DUPLEX RECEPTACLE: INDOOR DUPLEX - 20 AMP - 120VAC - COMMERCIAL GRADE - NEMA REFERENCE #5-20R – CSA/CULIUL LISTED - HUBBELL #CR20GRY
17					EXTERIOR GFCI RECEPTACLE: 20 AMP - 125VAC - COMMERCIAL GRADE - NEMA REF# 5-20R - WEATHER RESISTANT - MOUNTED IN A BELL BOX - WEATHERPROOF COVER - SURFACE MOUNTED AS SHOWN ON DRAWING;
	60	19682	2	EA	*** RECEPTACLE - HUBBELL #GFTWRST20GY**
	60	14903	2	EA	* BELL BOX WEATHER PROOF "IN-USE" COVER - TAYMAC #MM410C
18					EXTERIOR 240VAC RECEPTACLE: 50 AMP - 240V - COMMERICAL SPECIFICATION GRADE - NEMA REF# 6-50R - MOUNTED IN A WEATHERPROOF BOX - WEATHERPROOF COVER (WHEN CLOSED)
	60	10127	1	EA	*** RECEPTACLE - HUBBELL #HBL9367**
	STK		1	EA	* WEATHER PROOF BOX
	60	17460	1	EA	* WEATHER PROOF COVER – HUBBELL #HBL9425
19					EXIT SIGN/EMERGENCY LIGHT: 120V INPUT – 6VDC OUTPUT – COMPLIES WITH NEC AND OSHA. NICKEL CADMIUM BATTERY ILLUMINATES EXIT SIGN AND EMERGENCY LIGHT - EMERGENCY LIGHT CONSISTS OF - TWO 3.6V, 0.78W LED DC LAMPS PROVIDE EMERGENCY ILLUMINATION. EXIT FACE ASSEMBLY – LETTERS 6" HIGH WITH 3/4" STROKE; RED FIBERGLASS COLOR PANEL – COOPER LIGHTING #APC7R
	60	10631	2	EA	
20					LIGHTING (EXTERIOR): 100W HPS - 120VAC OPERATION- UL LISTED 1572 - SUITABLE FOR WET LOCATIONS - CUTOFF WALLPACK - DIE CAST ALUMINUM CASTING HINGED REFRACTOR FRAME - CONTINUOUS SILICONE RUBBER GASKET -BRONZE ENAMEL FINISH - VANDAL RESISTANT PRISMATIC POLYCARBONATEREFRACTOR-BUILT IN PHOTO CONTROL – RAB #WP1CSN100/-PC
	60	14518	2	EA	
21					LIGHTING CONTACTOR: 8 POLE, 30A – ELECTRICALLY HELD - 120VAC CONTROL VOLTAGE – WITH NEMA-3R ENCLOSURE - AND HAND-OFF-AUTO SWITCH WITH LEGEND FACTORY INSTALLED; CONTACTOR HOA SWITCH & LEGEND ENCLOSURE – SQUARE-D 8903 #LH80V02C.
	60	24894	1	EA	**** DIMENSIONS: 9.83"W X 16.30"H X 8.62"D ****
22					SELECTOR SWITCH (SUBSTATION YARD LIGHTS); ON-OFF-ON 3 POSITION SELECTOR SWITCH WITH LEGEND PLATE MOUNTED IN A NEMA 4/13 ENCLOSURE – 600V MAX AC/DC – 10 AMP CONTINUOUS ;
	60	24895	1	EA	* SELECTOR SWITCH: 600VAC - 10AMP 30MM T-K - SCHNEIDER #9001KS11AH13
	60	24896	1	EA	*** ENCLOSURE PUSHBUTTON: 30MM XAP+OPTIONS - SCHNEIDER # XAPG19201**
	60	24897	1	EA	*** LEGEND PLATE ON/OFF: SCHNEIDER # 9001KN224-30MM**
					DIMENSIONS: 3.15"W X 3.15"H X 2.03"D
23					PLACEHOLDER
24					BATTERY EXHAUST FAN: 12" DIA EXHAUST FAN - 753 CFM F.A. - 115V MOTOR - WIRE GUARD - MOTORIZED LOUVER - WITH BIRD SCREENED AZZ FABRICATED RAIN HOOD
					****REQUIRES 13" SQUARE OPENING****
	60	25096	1	EA	* FAN - GRAINGER #1UD954
	60	25097	1	EA	* MOTORIZED LOUVER - GRAINGER #3HHP4
					***** SHOP NOTE: CONSTRUCT A 14" X 3" X 6" A304 STAINLESS STEEL ALUMINUM ENCLOSURE TO SPACE FAN & LOUVER APART *****
					*****NOTE FAN MOTOR IS FURNISHED WITH THERMAL PROTECTION TRIPS - WARNING FAN MOTOR WILL RESTART AFTER MOTOR THERMAL PROTECTOR TRIPS AND RESETS*****
25					MOTORIZED INTAKE LOUVER: 16" X 16" ALUMINUM DAMPER - WITH SHUTTER MOTOR - FILTER AND FINE MESH BUG SCREEN MOUNTED IN AN AZZ FABRICATED RAIN HOOD;
	60	12293	1	EA	*** LOUVER - GRAINGER #4C557**
	60	10376	1	EA	* MOTOR - GRAINGER #24N064
					****REQUIRES 18 1/2" SQUARE OPENING****
26					TIMER: 1-POLE ELECTROMECHANICAL TYPE 24 HOUR TIMER – 120V INPUT – CURRENT RATING 20 AMPS - 48 ON-OFF CYCLES PER DAY – 96 TRIPPERS INCLUDED – MINIMUM TIME SETTING IS 15 MIN. – MAX TIME SETTING IS 23 1/4 HOURS – INTERMATIC MODEL T1905;
	60	16762	1	EA	*** TIMER - GRAINGER STK #2E026**
					**** TIMER TO OPERATE THE EXHAUST FAN ****
					**** DIMENSIONS: 9.63"L X 5.38W" X 4.19"D ****

BILLS OF MATERIAL
L2014323r2.xlsm

27	60	32734	2	EA	HVAC DISCONNECT SWITCH: 2 POLE - SINGLE THROW - NON-FUSIBLE TYPE - GENERAL DUTY - 240VAC - 30A – NEMA 3R ENCLOSURE W/ PADLOCKABLE PROVISIONS; *** DISCONNECT SWITCH - CUTLER HAMMER #DG221URB** ****DIMENSIONS: 10.81"H X 3.75"D X 6.38"W****
28	60	32731	2	EA	HVAC DISCONNECT SWITCH: 2 POLE - SINGLE THROW - NON-FUSIBLE TYPE - GENERAL DUTY - 240VAC - 60A – NEMA 1 ENCLOSURE W/ PADLOCKABLE PROVISIONS; *** DISCONNECT SWITCH - CUTLER HAMMER #DG222UGB** ****DIMENSIONS: 14.38"H X 4.21"D X 8.69"W****
29	60	14340-2014323	1	EA	**AC PANELBOARD #1:** 42 CIRCUIT CUTLER HAMMER 225A COPPER BUS 120/240VAC - 1 PHASE - 3 WIRE 22 KAIC SERIES RATED 225A MAIN BREAKER NEMA 1 ENCLOSURE - SURFACE MOUNTED SURFACE MOUNTED COVER WITH DOOR TOP FEED GROUND BAR BOLTED DIMENSIONS: 20"W X 5 3/4"D X 48"H **FOLLOWING IS THE PANELBOARD CIRCUIT SCHEDULE ALL BREAKERS BOLT-ON TYPE** **CIRCUIT SIZE DESCRIPTION** **# 1,3 60A 2-POLE** **# 5,7 60A 2-POLE** **# 9,11 30A 2-POLE** **# 13,15 30A 2-POLE** **# 17,19 30A 2-POLE** **# 21,23 30A 2-POLE** **% 25,27 60A 2-POLE AIR HANDLER DISC #1 60AMP** **% 29,31 30A 2-POLE AIR HANDLER DISC #1 30AMP** **# 33 30A 1-POLE** **% 35 20A 1-POLE INTERIOR RECEPTACLES** **% 37 20A 1-POLE ALARM J-BOX RELAY POWER** **% 39 20A 1-POLE EXHAUST FAN/LOUVER/TIMER** **# 41 20A 1-POLE** **# 2,4 60A 2-POLE** **# 6,8 30A 2-POLE** **# 10,12 30A 2-POLE** **# 14,16 30A 2-POLE** **# 18,20 30A 2-POLE** **# 22,24 30A 2-POLE** **# 26,28 30A 2-POLE** **# 30,32 30A 2-POLE** **% 34 20A 1-POLE INTERIOR LIGHTS/EXIT LIGHTS** **% 36 20A 1-POLE EXTERIOR RECPTACLES** **# 38 20A 1-POLE** **# 40 20A 1-POLE** **# 42 20A 1-POLE** **% INDICATES WIRED BY AZZ** **# INDICATED WIRED BY OTHERS** ****POWER SOURCE WIRED TO MANUAL TRANSFER SWITCH****

BILLS OF MATERIAL
L2014323r2.xlsm

30		14341-2014323	1	EA	**AC PANELBOARD #2:** 42 CIRCUIT CUTLER HAMMER 225A COPPER BUS 120/240VAC - 1 PHASE - 3 WIRE 22 KAIC SERIES RATED 225A MAIN BREAKER NEMA 1 ENCLOSURE - SURFACE MOUNTED SURFACE MOUNTED COVER WITH DOOR TOP FEED GROUND BAR BOLTED DIMENSIONS: 20"W X 5 3/4"D X 48"H **FOLLOWING IS THE PANELBOARD CIRCUIT SCHEDULE ALL BREAKERS BOLT-ON TYPE** **CIRCUIT SIZE DESCRIPTION** **# 1,3 60A 2-POLE** **# 5,7 60A 2-POLE** **# 9,11 30A 2-POLE** **# 13,15 30A 2-POLE** **# 17,19 30A 2-POLE** **# 21,23 30A 2-POLE** **% 25,27 60A 2-POLE AIR HANDLER DISC #2 60AMP** **% 29,31 30A 2-POLE AIR HANDLER DISC #2 30AMP** **% 33 20A 1-POLE EXTERIOR LIGHTS** **# 35 20A 1-POLE** **% 37 20A 1-POLE LIGHTING CONTACTOR COIL** **% 39 30A 1-POLE LIGHTING CONTACTOR CKT #1** **% 41 30A 1-POLE LIGHTING CONTACTOR CKT #2** **# 2,4 60A 2-POLE** **# 8,8 30A 2-POLE** **# 10,12 30A 2-POLE** **# 14,16 30A 2-POLE** **# 18,20 30A 2-POLE** **% 22,24 50A 2-POLE WELDING RECEPTACLE** **# 26,28 30A 2-POLE** **# 30,32 30A 2-POLE** **# 34 20A 1-POLE** **# 36 20A 1-POLE** **# 38 20A 1-POLE** **% 40 30A 1-POLE LIGHTING CONTACTOR CKT #3** **% 42 30A 1-POLE LIGHTING CONTACTOR CKT #4** **% INDICATES WIRED BY AZZ** **# INDICATED WIRED BY OTHERS** ****POWER SOURCE WIRED TO MANUAL TRANSFER SWITCH****
31	60	24898	1	EA	MANUAL TRANSFER SWITCH: 3 POLE - S/N - DOUBLE THROW - NON-FUSIBLE TYPE - 240VAC - 400A – NEMA 1 ENCLOSURE W/ PADLOCKABLE PROVISIONS **TRANSFER SWITCH - CUTLER HAMMER #DT325UGK** ****DIMENSIONS: 54.25"H X 7.25"D X 22.66"W, 23.48"W WITH HANDLE**** **** WIRED TO AC PANELS**** **LUGS WILL ACCEPT (2) #1/0 AWG TO 300 KCMIL PER PHASE OR** **(1) 1/0AWG TO 750 MCM**

BILLS OF MATERIAL
L2014323r2.xlsm

32					**CABLE TRAY: LADDER TYPE WITH 9" RUNG SPACING - ALUMINUM - AS FOLLOWS;**
					4" SIDE RAIL HAS 3" LOADING DEPTH
	60	13255	8	EA	* 24"W X 12'-0"L STRAIGHT SECTION - B-LINE #3AA09-24-144
	60	19053	4	EA	* 24"W HORIZ. BEND 90° - 12"R - B-LINE #4A-24-90HB12
	60	10937	4	EA	* 24"W HORIZ. TEE - 12"R - B-LINE #4A-24-HT12
	60	12825	1	EA	* 24"W HORIZ. CROSS - 12"R - B-LINE #4A-24-HX12
	60	24057	20	EA	* GROUND LUG - NSI LAY-IN LUG - #6 STR. THRU 250MCM - NSI #GLA250
					*** CABLE TRAY SUPPORT:**
					TRAPEZE TYPE HANGER
	60	STK	67	FT	* 1 5/8" x 1 5/8" GALVANIZED STRUT ATTACHED TO CEILING AND UNDER TRAY @ APPROX 8 FT SPACING
	60	STK	96	FT	* 1/2" DIAMETER ALL-THREADED ROD
					****#4/0 AWG BARE COPPER WIRE ROUTED THROUGHOUT CABLE TRAY AND CONNECTED TO INTERIOR GROUND BUS IN 2 PLACES****
					****SHOP TO USE BURNDY COMPRESSION CONNECTORS FOR CONNECTING CABLE TRAY GROUND DROPS TO GROUND LOOP****
33			3	EA	**FLOOR OPENING (GND PAD):** 9"W X 9"D CLEAR OPENING IN FLOOR PLATE FRAMED WITH 2" x 3" ANGLE AND 2" FLAT BAR 10"W X 10"D 1/4"T GASKETED COVER PLATE FLUSH MOUNTED
34	70	16099	19	SHT	TEMPORARY FLOOR COVERING: SHOP TO COVER FLOOR WITH MASONITE SHEETS 48" X 96" X 1/8" THICK
35	20	N/A	22	EA	**FLOOR OPENINGS (ENTRY HUBS BY EP2):** 5"W X 5"D CLEAR OPENING IN FLOOR PLATE ON 12" CENTERS
36					TEMPORARY BATTERY CONNECTION WALL OPENING: 4" RGD CONDUIT SCHEDULE 80 - WITH INTERNAL SCREW IN PLUG FOR CUSTOMER USE
	60		1	EA	4" RGD CONDUIT SCHEDULE 80
	60		1	EA	4" COUPLER FOR PLUG
	60		1	EA	4" SCREW IN PLUG
37					**ANCHOR CLIPS:**
	70	40029	10	EA	AZZ TO SUPPLY HOT DIPPED GALVANIZED ANCHOR CLIPS PER DRAWING X-ATK-025
			10	EA	3/4" ANCHOR BOLTS FURNISHED BY OTHERS AT JOB SITE
38					PLACEHOLDER
39					2" CONDUIT NIPPLE: PROVIDED THROUGH WALL FOR WIRING FOR GPS SYSTEM BY EP2
40					ETHERNET JACKS: CAT-5E - 8 CONDUCTOR SNAP IN MODULE INSTALLED IN DUPLEX TYPE WALL PLATE;
	60	24873	2	EA	* CAT-5E ETHERNET JACK RJ45 - GRAINGER #13U523
	60	25035	1	EA	* CAT-5E ETHERNET JACK WALL PLATE - SINGLE GANG 2 PORTS - GRAINGER #14J393
					****ETHERNET JACKS TO BE WIRED/CONDUIT BY EP2****
41					ALARM JUNCTION BOX: LATCH COVER BOX – 24"W X 24"H X 6"D NEMA 1 ENCLOSURE - GRAY ENAMEL;
	60	23229	1	EA	* JUNCTION BOX - HOFFMAN #A24N24ALP
	60	23230	1	EA	* BACK PANEL - HOFFMAN #A24N24MP
	60	14098	40	EA	* GRAY TERMINAL BLOCK DIN RAIL MTD 40A WIRE SIZE #22 THROUGH #10 AWG – SPREC #V7-W6
	60	14358	6	EA	* END BARRIER 50A AND 85A - SPREC #V7-EB10
	60	14049	6	EA	* GRAY END ANCHOR - SPREC #SPREC #V7-EA35
	60	14050	1	EA	* DIN MOUNTING RAIL 78"L PERFORATED - EATON #XBANS3575P
	60	14763	15	EA	*** TERMINAL MARKER 0-9 - SPREC #V7-MP**
	60	23500	7	EA	* RELAY - 120 VAC COIL - 2.5AMP RATED FORM C CONTACTS - POTTER & BRUMFIELD #KUEP-11A15-120
	60	15032	7	EA	*** RELAY BASE: POTTER & BRUMFIELD #27E893**
					**** ALARM CONTACTS ARE TO BE RATED FOR 125VDC ****

BILLS OF MATERIAL
L2014323r2.xlsm

IMPORTANT - PLEASE REVIEW THE BELOW INFORMATION IN DETAIL, TO ASSURE THAT THE PRODUCT DESC

ELECTRICAL NOTES AND OTHER RELATED NOTATION:

A) GENERAL NOTES:

A1. WIRING DIAGRAMS SHOW WIRING IN A POINT-TO-POINT FORMAT AND SHALL, IN NO CASE, BE UNDERSTOOD AS SOMETHING OTHER THAN A SYMBOLIC REPRESENTATIONAL FORM. ACTUAL WIRING ROUTING, WIRING ENTRIES AND WIRING EXITS FROM EQUIPMENT OR DEVICES SHALL BE DETERMINED BY OTHER MEANS, IF APPLICABLE. FOR EXACT ORIENTATION OF LOOSE DEVICE(S) INSTALLED IN AN ENCLOSURE, SEE ELECTRICAL LAYOUT DRAWINGS.

A2. AREA CLASSIFICATION OF BUILDING LOCATION: NON-HAZARDOUS, UNLESS NOTED OTHERWISE.

A3. REFER TO BILLS OF MATERIAL (BOM) L2014323 (WRC-C-511) FOR OTHER SPECIAL NOTATION AND/OR INSTRUCTIONS. SHOP SHALL WORK THIS DOCUMENT WITH THE UTILITY WIRING OR WIRING DRAWINGS, ACCORDINGLY.

A4. FOR ALL ELECTRICAL EQUIPMENT AND DEVICES SHOWN ON WIRING DIAGRAM(S), SHOP TO VERIFY THAT THE WIRING AGREES WITH THE MANUFACTURER'S INSTALLATION INSTRUCTIONS, DEVICE NAMEPLATES AND DOCUMENTATION. IF ANY DISCREPANCIES ARE FOUND OR ANY CONFLICTS ARISE, SHOP TO CONSULT WITH THE ENGINEERING DEPARTMENT, BEFORE PROCEEDING.

A5. ALL WIRING AND INSTALLATIONS SHALL BE IN ACCORDANCE WITH THE LATEST EDITION OF THE NATIONAL ELECTRIC CODE (NEC) 2017, AT A MINIMUM.

A6. FOR PROJECTS THAT ARE IN CANADA, ALL WIRING AND INSTALLATIONS SHALL BE IN ACCORDANCE WITH THE LATEST EDITION OF THE ONTARIO ELECTRICAL SAFETY CODE CSA STANDARD, AT A MINIMUM.

⟨XX⟩ DENOTES ITEM LISTED ON BILLS OF MATERIAL (BOM) L2014323 (WRC-C-511).

B) CONDUIT NOTES:

B1. FOR ALL BUILDING INTERIOR CONDUIT, UNLESS SPECIFICALLY NOTED OTHERWISE ON THE DRAWINGS OR BILL OF MATERIALS (BOM), EMT GALVANIZED STEEL CONDUIT WITH COMPRESSION FITTINGS SHALL BE INSTALLED, SURFACE MOUNTED TO INTERIOR WALLS.

B2. FOR ALL BUILDING EXTERIOR CONDUIT, UNLESS SPECIFICALLY NOTED OTHERWISE ON THE DRAWINGS OR BILL OF MATERIALS (BOM), RIGID GALVANIZED STEEL CONDUIT SHALL BE INSTALLED.

B3. AT LOW POINTS OF ALL EXTERIOR RIGID GALVANIZED STEEL CONDUIT ENTERING THE BUILDING WALLS, INSTALL CONDUIT DRAIN(S) TO PROVIDE DRAINAGE OF ANY CONDENSATION OR ANY ACCUMULATION OF WATER IN THE DEVICE OR CONDUIT UPSTREAM.

B4. ALL CONDUITS TO HAVE PLASTIC INSULATED-THROAT BUSHINGS ON EACH END.

C) GROUND OR GROUNDING RELATED NOTES:

C1. CONDUITS BELOW CABLE TRAY (IF APPLICABLE) REQUIRE GROUNDING BUSHINGS ON THE TOP END.

C2. FOR GROUNDING PLAN, REFER TO DRAWING WRC-C-508.

C3. ALL 120VAC SMOKE DETECTOR AND RELAY MODULE METALLIC OUTLET DEVICE BOXES TO BE GROUNDED WITH A GREEN INSULATED, COPPER #12 AWG GROUND WIRE.

C4. ANY DEVICE/EQUIPMENT THAT HAS CONCENTRIC OR ECCENTRIC KNOCKOUTS, AND IS ABOVE 250V, MUST HAVE A GROUNDING BUSHING.

C5. ALL METAL BOXES WITH AC POWER TERMINATIONS OR SPLICES MUST BE BONDED TO THE EQUIPMENT GROUNDING CONDUCTOR, USING THE LARGEST TERMINATED OR SPLICED EQUIPMENT GROUNDING CONDUCTOR. IN BOXES, WHERE CONDUCTORS PASS THROUGH UNTERMINATED OR UNBROKEN, ARE NOT REQUIRED TO BE BONDED.

C6. WHEN A PANELBOARD REQUIRES A NEUTRAL BOND TO GROUND, USE FACTORY PROVIDED BONDING HARDWARE. IF NONE IS PROVIDED, INSTALL A GREEN INSULATED BONDING JUMPER WIRE, SIZED IN ACCORDANCE WITH NEC TABLE 250.102(C)(1), SEE BELOW.

C7. THE AC POWER SERVICE, WHETHER BEING ONE OR MORE, AS REQUIRED BY THE PROJECT BUILDING SCOPE OF WORK, SHALL HAVE A MAIN BONDING JUMPER INSTALLED BETWEEN THE INCOMING GROUNDED SERVICE CONDUCTOR AND THE EQUIPMENT GROUNDING CONDUCTOR AND THE BUILDING PERIMETER GROUND BUS. IT SHALL BE GREEN INSULATED COPPER AND SIZED PER NEC TABLE 250.66, SEE BELOW.

C8. ALL AC BRANCH POWER CIRCUITS SHALL HAVE A GREEN INSULATED, COPPER EQUIPMENT GROUND CONDUCTOR, SIZED ACCORDING TO NEC TABLE 250.122, SEE BELOW.

C9. BONDING JUMPERS DEFINED AS A RELIABLE CONDUCTOR(S) TO ENSURE THE REQUIRED ELECTRICAL CONDUCTIVITY BETWEEN ALL METAL CONDUCTIVE BODIES AND PARTS REQUIRED TO BE ELECTRICALLY CONNECTED TO PROVIDE AN EFFECTIVE GROUND PATH.

D) WIRING NOTES:

D1. IF THE PROJECT IS IN THE STATE OF COLORADO, PER COLORADO CODE AMENDMENTS SECTION 907.2.11.4, SMOKE AND/OR CARBON MONOXIDE ALARMS SHALL NOT BE INSTALLED ON A BRANCH CIRCUIT BREAKER DEDICATED ONLY FOR SMOKE AND/OR CARBON MONOXIDE ALARMS.

D2. IF THE PROJECT IS IN THE STATE OF TEXAS OR COLORADO: THE INTERIOR LIGHT FIXTURES SHALL BE CONTROLLED BY INTERIOR LIGHT SWITCHES, SO THAT 50% OF THE LIGHTING CAN BE SHUT OFF AT A TIME, IN AN UNIFORM PATTERN. SWITCHING ALTERNATE ROWS OF LIGHT FIXTURES OR EVERY OTHER LIGHT FIXTURE IS PREFERABLE. ONE POWER CIRCUIT MAY BE USED AS LONG AS THE TOTAL LOAD DOES NOT EXCEED 80% OF THE AMPERE RATING OF THE CURRENT OVERPROTECTION DEVICE (OCPD).

D3. ALL FIRE ALARM INTERCONNECTION (BETWEEN FIRE PROTECTION/INDICATION DEVICES) WIRING SHALL BE INSTALLED IN A SEPARATE CONDUIT. USE TWO CONDUCTOR (2/C) #18 TYPE FPL CABLE WITH BLACK & RED CONDUCTORS AND RED OUTER JACKET, UNLESS NOTED OTHERWISE.

D4. ALL WIRING OF VOLTAGES LESS THAN 50 VOLTS AC OR DC SHALL BE INSTALLED IN A SEPARATE CONDUIT, UNLESS NOTED OTHERWISE.

D5. ALL THERMOSTAT CABLE SHALL BE TEN CONDUCTOR (10/C) #18 AWG 600V CABLE. THIS CABLE MAY BE INSTALLED IN THE BUILDING PERIMETER WIREWAY, IF THE VOLTAGES DO NOT EXCEED 600 VOLTS.

D6. ALL ALARM WIRING TO A COMMON ALARM JUNCTION BOX SHALL BE TWO CONDUCTOR (2/C) #16 AWG 600V CABLE WITH BLACK AND WHITE CONDUCTORS. THE BLACK WIRE SHALL BE THE COMMON AND THE WHITE CONDUCTOR SHALL BE THE SWITCHED CONTACT. THIS CABLE MAY BE INSTALLED IN THE BUILDING PERIMETER WIREWAY, IF THE VOLTAGES DO NOT EXCEED 600 VOLTS.

E) WIRE/CABLE NOTES:

E1. ALL WIRING TO BE SINGLE CONDUCTOR, INSULATED, STRANDED COPPER, 600V TYPE XHHW-2 WIRE, UNLESS NOTED OTHERWISE. SEE BILLS OF MATERIAL L2014323 (WRC-C-511) FOR OTHER CONTROL AND INSTRUMENTATION WIRE TYPES.

E2. ALL WIRING TO BE #12 AWG, UNLESS NOTED OTHERWISE.

E3. ALL SHIELDED CONTROL AND INSTRUMENTATION CABLE MUST HAVE INSULATED TUBING COVERING SHIELD/DRAIN WIRES.

E4. FOR PROJECTS THAT REQUIRE SLEEVE TYPE WIRE MARKERS: ALL WIRE #10 AWG AND SMALLER SHALL HAVE BRADY PERMASLEEVE SLEEVE TYPE WIRE MARKERS ON EACH END. ALL WIRE AND CABLE LARGER THAN #10 AWG SHALL HAVE BRADY TYPE B-7643 WIRE/CABLE MARKERS FASTENED ONTO THE WIRE/CABLE WITH PLASTIC ZIP-TIES ON EACH END, IF APPLICABLE.

E5. ALL CABLE SHALL HAVE THEIR CABLE IDENTIFICATION NUMBERS PRINTED ON BRADY TYPE B-7643 CABLE MARKERS. THE CABLE MARKERS SHALL BE FASTENED ONTO THE CABLE WITH PLASTIC ZIP-TIES AT EACH END, IF APPLICABLE.

E6. FOR PROJECTS THAT REQUIRE THERMATAB TYPE WIRE MARKERS: ALL WIRE SHALL HAVE BRADY THERMATAB TYPE WIRE MARKERS ON EACH END. ALL CABLE SHALL HAVE THEIR CABLE IDENTIFICATION NUMBERS PRINTED ON BRADY TYPE B-7643 CABLE MARKERS, WHICH SHALL BE FASTENED ONTO THE CABLE WITH PLASTIC ZIP-TIES AT EACH END, IF APPLICABLE

F) WIRE COLOR NOTES:

F1. THE FOLLOWING ARE ABBREVIATIONS ARE USED TO DENOTE WIRE COLORS OR PHASE TAPING ON ALL WIRING DRAWINGS: (BK) = BLACK, (RD) = RED, (BU) = BLUE, (OR) = ORANGE, (YL) = YELLOW, (BR) = BROWN, (WH) = WHITE, (GN) = GREEN, (PR) = PURPLE, (PK) = PINK, (GY) = GRAY.

F2. WHEN COLOR PHASE TAPING OF WIRE IS REQUIRED, WIRE LARGER THAN #8 AWG SHALL HAVE A MINIMUM OF SIX INCHES OF COLOR PHASE TAPE STARTING ONE INCH FROM THE CRIMP LUG OR WHERE THE WIRE INSULATION IS STRIPPED.

F3. ALL 120VAC LINE (HOT) POWER WIRE SHALL BE BLACK (BK).

F4. ALL 120VAC LIGHT SWITCH WIRE TRAVELERS (WIRING BETWEEN LIGHT SWITCHES) SHALL BE PURPLE (PR).

F5. ALL 120VAC LIGHT SWITCH-LEG WIRE (WIRING BETWEEN LIGHT SWITCH AND LIGHT FIXTURE) SHALL BE PINK (PK).

F6. ALL NEUTRAL WIRE SHALL BE WHITE (WH), UNLESS NOTED OTHERWISE.

F7. ALL GROUND AND EQUIPMENT GROUNDING WIRE SHALL BE GREEN (GN), UNLESS NOTED OTHERWISE.

F8. ALL 480VAC POWER WIRING SHALL BE BROWN (BR) FOR PHASE L1, ORANGE (OR) FOR PHASE L2, AND YELLOW (YL) FOR PHASE L3, IF APPLICABLE.

F9. ALL 208VAC POWER WIRING SHALL BE BLACK (BK) FOR PHASE L1, RED (RD) FOR PHASE L2, AND BLUE (BU) FOR PHASE L3, IF APPLICABLE.

F10. ALL 240VAC POWER WIRING SHALL BE BLACK (BK) FOR PHASE L1 AND RED (RD) FOR PHASE L2 (FOR SINGLE PHASE CIRCUITS), IF APPLICABLE.

F11. ALL DC WIRING SHALL BE RED (RD) FOR POSITIVE (+) AND BLACK (BK) FOR NEGATIVE (-), IF APPLICABLE.

F12. ALL 240VAC 3 PHASE DELTA POWER WIRING SHALL BE BLACK (BK) FOR PHASE L1, ORANGE (OR) FOR HIGH-LEG PHASE L2 AND BLUE (BU) FOR PHASE L3 (IF APPLICABLE).

F13. FOR ALL MULTI-CONDUCTOR CABLES HAVING BLACK, RED AND BLUE COLORED INSULATED CONDUCTORS, A MINIMUM OF TWO INCHES OF THE COLOR DENOTED IN PARENTHESIS, FOR EXAMPLE, (WH) = WHITE, SHALL BE TAPED AT THE ENDS OF THE CONDUCTORS NEAR THEIR TERMINATION POINTS.

F14. ALL MEDIUM VOLTAGE AC POWER WIRING SHALL BE BLACK (BK) FOR PHASE L1, RED (RD) FOR PHASE L2, AND BLUE (BU) FOR PHASE L3, IF APPLICABLE.

PART OF THE 2017 NATIONAL ELECTRIC CODE TABLE 250.66 SERVICE-ENTRANCE GROUNDING ELECTRODE CONDUCTOR FOR ALTERNATING-CURRENT SYSTEMS

SIZE OF LARGEST UNGROUNDED SERVICE-ENTRANCE CONDUCTOR OR EQUIVALENT AREA FOR PARALLEL CONDUCTORS* (AWG/KCMIL) - COPPER	SIZE OF GROUNDING ELECTRODE CONDUCTOR (AWG/KCMIL) - COPPER
#1/0 AWG OR SMALLER	#6 AWG
#2/0 OR #3/0 AWG	#4 AWG
OVER #3/0 AWG THROUGH #350 KCMIL	#2 AWG
OVER #350 THROUGH #600 KCMIL	#1/0 AWG
OVER #600 THROUGH #1100 KCMIL	#2/0 AWG
OVER #1100 KCMIL	#3/0 AWG

NOTES:

* THIS TABLE ALSO APPLIES TO THE DERIVED CONDUCTORS OF SEPARATELY DERIVED AC SYSTEMS (BATTERIES, GENERATORS, BATTERIES, TRANSFORMERS, PROVIDED THAT THEY HAVE NO DIRECT ELECTRICAL CONNECTION TO ANOTHER POWER SOURCE).

WHERE THERE ARE NO SERVICE-ENTRANCE CONDUCTORS, THE GROUNDING ELECTRODE CONDUCTOR SIZE SHALL BE DETERMINED BY THE EQUIVALENT SIZE OF THE LARGEST CONDUCTOR REQUIRED FOR THE LOAD TO BE SERVED.

PART OF THE 2017 NATIONAL ELECTRIC CODE TABLE 250.102(C)(1) GROUNDED CONDUCTOR, MAIN BONDING JUMPER, SYSTEM BONDING JUMPER AND SUPPLY-SIDE BONDING JUMPER FOR ALTERNATING-CURRENT SYSTEMS

SIZE OF LARGEST UNGROUNDED CONDUCTOR OR EQUIVALENT AREA FOR PARALLEL CONDUCTORS (AWG/KCMIL) - COPPER	SIZE OF GROUNDED CONDUCTOR OR BONDING JUMPER* (AWG/KCMIL) - COPPER
#1/0 AWG OR SMALLER	#6 AWG
#2/0 OR #3/0 AWG	#4 AWG
OVER #3/0 AWG THROUGH #350 KCMIL	#2 AWG
OVER #350 THROUGH #600 KCMIL	#1/0 AWG
OVER #600 THROUGH #1100 KCMIL	#2/0 AWG

* FOR THE PURPOSES OF APPLYING THIS TABLE, THE TERM "BONDING JUMPER" REFERS TO MAIN BONDING JUMPERS, SYSTEM BONDING JUMPERS AND SUPPLY-SIDE BONDING JUMPERS. A SYSTEM BONDING JUMPER IN A PANELBOARD BONDS THE NEUTRAL BUS TO THE PANELBOARD EQUIPMENT GROUNDING BUS OR GROUND BAR.

PART OF THE 2017 NATIONAL ELECTRIC CODE TABLE 250.122 MINIMUM SIZE EQUIPMENT GROUNDING CONDUCTOR (ON THE LOAD SIDE OF AN OVERCURRENT DEVICE) FOR GROUNDING RACEWAY AND EQUIPMENT

RATING OR SETTING OF AUTOMATIC OVERCURRENT DEVICE IN CIRCUIT AHEAD OF EQUIPMENT, CONDUIT, ETC. (NOT EXCEEDING IN AMPERES)	SIZE (AWG) COPPER
15 AMPS	#14 AWG
20 AMPS	#12 AWG
60 AMPS	#10 AWG
100 AMPS	#8 AWG
200 AMPS	#6 AWG
300 AMPS	#4 AWG
400 AMPS	#2 AWG

CUSTOMER PO#: 10292-168338

DATE	DRAWN BY	NO.	APPROVED BY	REVISION DESCRIPTION
06-20	SMW	1	PDK	CONFORMING TO CONSTRUCTION RECORDS
06-20	SMW	0	PDK	WAS DWG 2014323-EN, REV. 0

BLACK HILLS ENERGY

WEST RAPID CITY SUBSTATION

CONTROL ENCLOSURE ELECTRICAL NOTES

DRAWN BY: FR/AZZ DATE 4/8/19 DWG NO. WRC-C-512 REVISION 1

APPROVED BY: LS/AZZ DATE 4/8/19

Jun 15, 2020 - 3:33pm P:\04\233\00\Dwg\Record\WRC\CAD\WRC-C-512.dwg

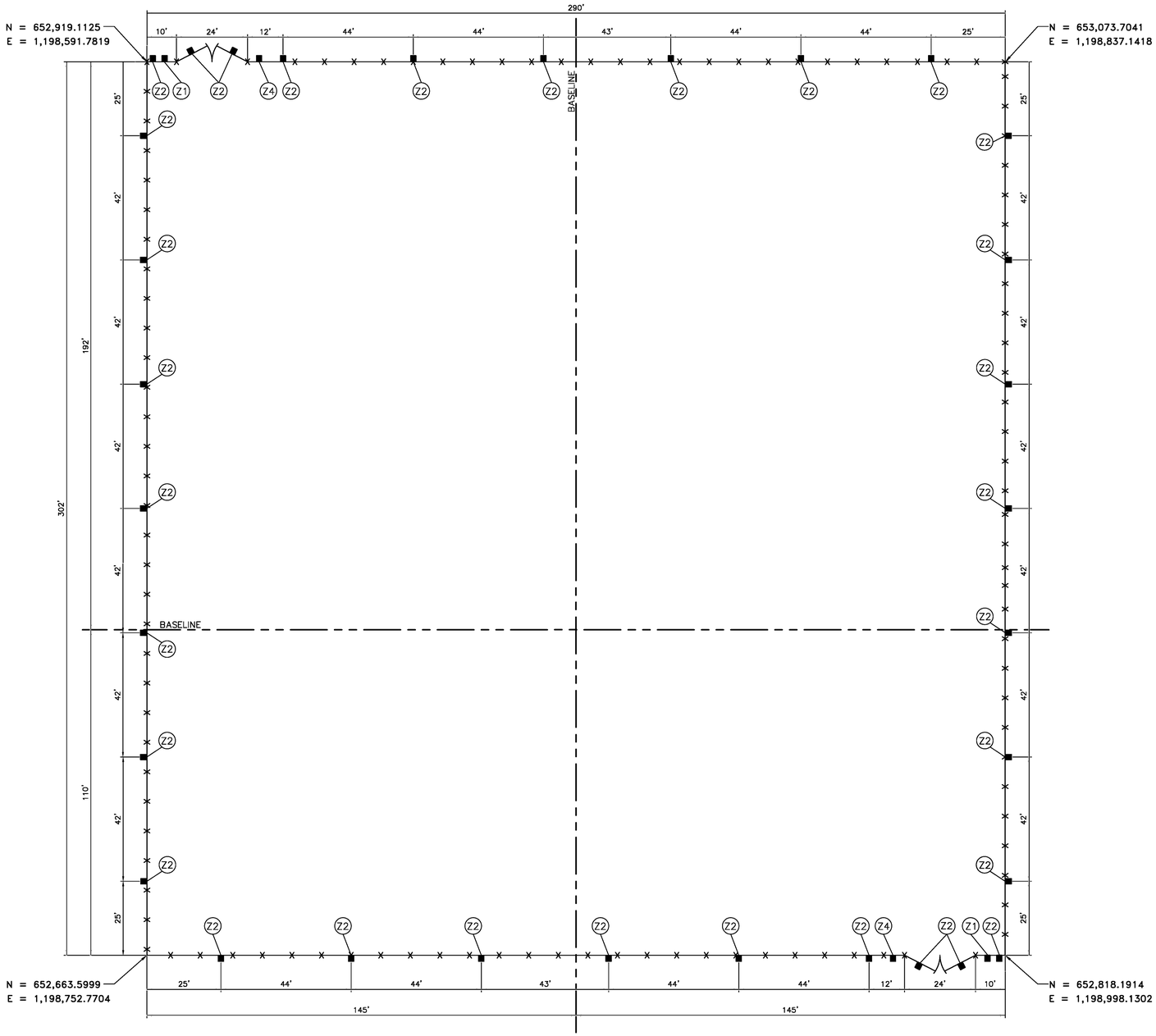

COORDINATE SYSTEM:
NSRS 2011 SOUTH DAKOTA STATE PLANES, SOUTH ZONE, US FOOT

LEGEND:

Z2	SIGN WITH DETAIL NUMBER
Z1	NAME & ADDRESS SIGN
Z2	WARNING SIGN
Z4	PPE REQUIRED SIGN
	CHAINLINK FENCE

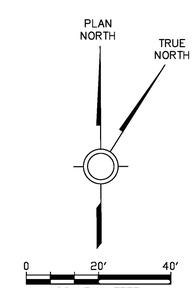

P:\04023\00\DWG\RECORD\WRC\CAD\WRC-C-520.DWG

DGR ENGINEERING
ROCK RAPIDS, IOWA
(712) 472-2531

DATE	DRAWN BY	NO.	APPROVED BY	REVISION DESCRIPTION
06-20	KLV	1	PJK	CONFORMING TO CONSTRUCTION RECORDS
01-19	KLV	0	PJK	FOR CONSTRUCTION

BLACK HILLS ENERGY

WEST RAPID CITY SUBSTATION

FENCE PLAN

DRAWN BY KLV DATE 09-18
APPROVED BY PJK DATE 09-18
DWG NO. WRC-C-520 REVISION 1

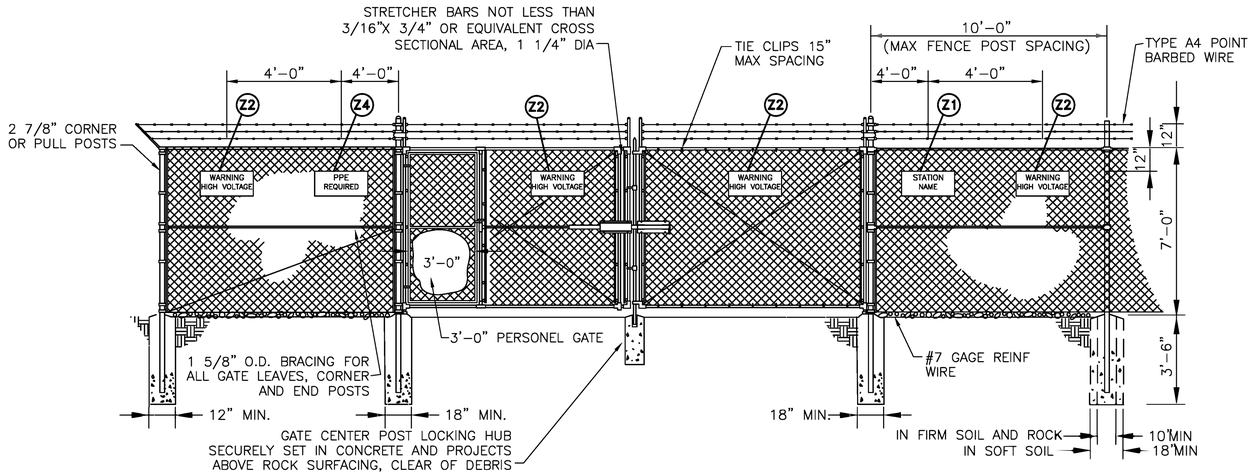

TYPICAL ELEVATION-LARGE GATE

NTS

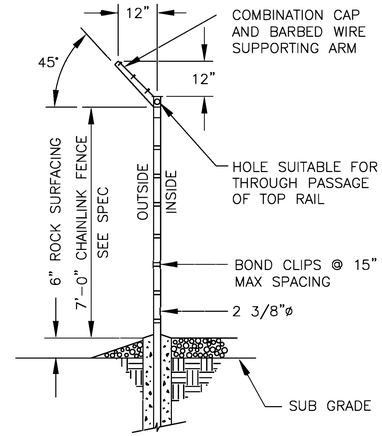

TYPICAL LINE POST

NTS

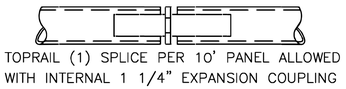

TOPRAIL SPLICE DETAIL

NTS

FENCE POST SIZES

DESCRIPTION	PIPE O.D. SIZE
CORNER POST	2 7/8"
LINE POST	2 3/8"
DOUBLE SWING GATES	4"
TOP RAIL	1 5/8"
GATE FRAMES	1 7/8"

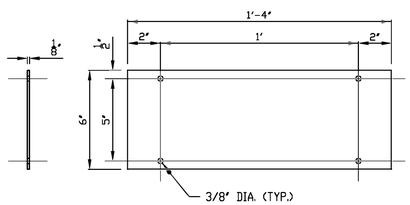

BACK PLATE (TYP)

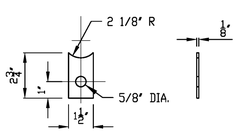

LOCKING TAB

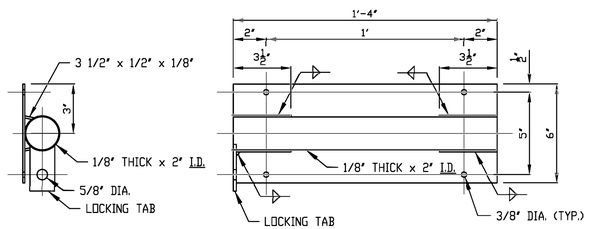

PAD LOCK SIDE - SLIDE TUBE

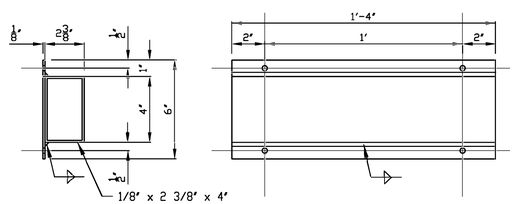

CAPTURE SIDE - SLIDE TUBE

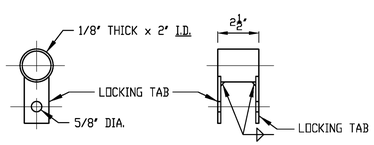

SLIDING BAR SPACER

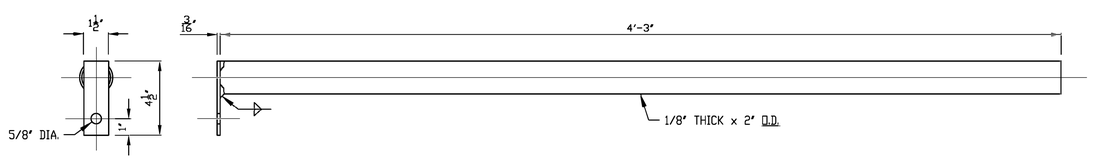

SLIDING BAR

GATE CLOSER DETAILS

(SUPPLIED BY OWNER)

GENERAL FENCE NOTES

1. NEW FENCE WORK TO BE IN ACCORDANCE WITH SPECIFICATIONS AND DETAILS ON THIS SHEET AND IN THE CONTRACT TECHNICAL SPECIFICATIONS.
2. FENCE FABRIC SHALL BE 6" ABOVE SUBGRADE FOR ENTIRE AREA PERIMETER. 6" OF CRUSHED ROCK SURFACING SHALL BE DISTRIBUTED OVER SUBGRADE SUCH THAT THE FENCE FABRIC AND ROCK SURFACING MEET BUT DO NOT OVERLAP MORE THAN 1".
3. ADD SIGNS TO GATES AND FENCE AS SHOWN ON THE FENCE PLAN. SIGNS SUPPLIED BY OWNER AND INSTALLED BY CONTRACTOR.
4. FENCE FABRIC, LINE POSTS, GATE POSTS, TOP RAILS, BRACES, ETC. SHALL BE GALVANIZED. HINGES, SPLICES, AND OTHER ACCESSORIES SHALL NOT BE THREADED STYLE. USE SLIP TYPE ACCESSORIES IN LIEU OF THREADED TYPE.
5. GATES SHALL BE PRE-ASSEMBLED IN THE FACTORY AND DELIVERED TO THE SITE TO INSURE SQUARE, TRUE AND TIGHT SWING GATE SYSTEMS.
6. THE CONTRACTOR SHALL SUBMIT FENCE SAMPLES TO OWNER FOR APPROVAL PRIOR TO ORDERING.

P:\04233\00\DWG\RECORD\WRC\CAD\WRC-C-521.DWG

DGR ENGINEERING
ROCK RAPIDS, IOWA
(712) 472-2531

DATE	DRAWN BY	NO.	APPROVED BY	REVISION DESCRIPTION
06-20	KLV	1	PDK	CONFORMING TO CONSTRUCTION RECORDS
01-19	KLV	0	PDK	FOR CONSTRUCTION

BLACK HILLS ENERGY
WEST RAPID CITY SUBSTATION
FENCE DETAILS

DRAWN BY KLV DATE 11-18
APPROVED BY PDK DATE 11-18
DWG NO. WRC-C-521 REVISION 1