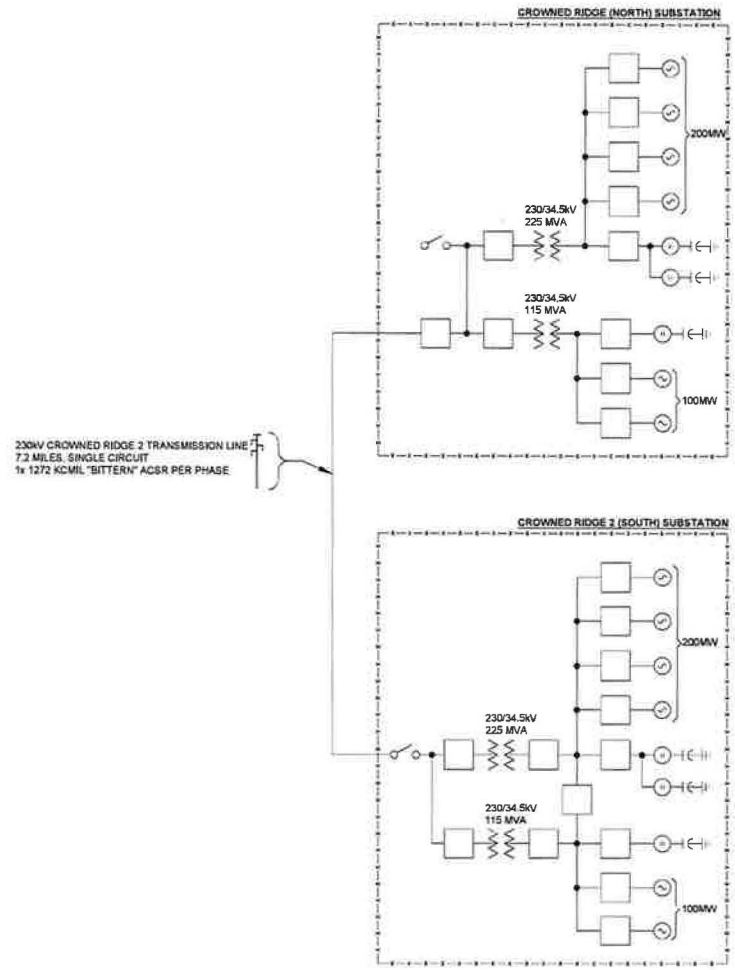

PRELIMINARY

Rev	date	by	chkd	description

BURNS McDONNELL
9400 WARD PARKWAY
KANSAS CITY, MO 64114
816-333-9400

date	date/rev
04/09/18	-
designed	checked
-	-

CROWNED RIDGE WIND, LLC

CROWNED RIDGE PROJECT
OVERVIEW
SINGLE-CIRCUIT OPTION

project	contract
-	-

drawing CR PROJECT rev. A

sheet 1 of 1 sheets

file CROWNED RIDGE PROJECT.DWG

COPYRIGHT © 2013 BURNS & McDONNELL ENGINEERING COMPANY, INC.