DOT-166

# Application for Highway Access Permit
# South Dakota Department of Transportation

**Permit Application (to be completed by applicant).**

**Instructions:** Please contact the local South Dakota Department of Transportation office to determine what supporting documents must accompany this application. Please submit a separate application and supporting documentation for each access requested. Attach additional sheets as necessary. Please print or type. Owner and applicant agree to comply with special and standard conditions if access permitted.

**Property Owner:**
Name(s): Prevailing Wind Park, LLC
Mailing Address: 2180 S 1300 E ste 600
City, State, Zip: Salt Lake City, UT 84106
Daytime Phone: 325-207-9064

**Applicant (if different from Owner):**
Name(s):
Mailing Address:
City, State, Zip
Daytime Phone:

**Property to be Served by Approach:**
County: Bon Homme
Section: 31 Township: Monroe
Range: 61-W
Or
Subdivision: _____ Block/Lot: _____
Street Address:
City:

**State Highway to be Accessed by Approach:**
State Highway Number: 46
Access would be 927 feet (north, south, east or west) from 405TH AVE (nearest cross street).

**Land Use of Property to be Served (check one):**
- ☐ Agricultural: acres served _____
- ☐ Business: type _____ total square footage of buildings: ____ number of employees _____
- ☐ Residential: number of single-family dwellings _____, or number of multi-family dwellings _____.
- ☑ Other: describe Wind Turbine Access

**Type of Permit Requested (check one)**
- ☐ New approach
- ☑ Change in use
- ☐ Temporary access
- ☐ Improve existing access
- ☐ Relocate existing access
- ☐ Remove existing access

**Requested Approach Width (check one)**
24' ☑ 30' ☐ 36' ☐ 40' ☐

**Local Government Reviews:**

**County:**
Comments:
Concurrence signature: Date:

**Municipality:**
Comments:
Concurrence signature: Date:

**Estimated Date of Construction:** June, 2019

I, the undersigned, request permission to construct or modify an access approach subject to the rules and regulations set forth in SDCL 70:09.

**Signature of Applicant:** [signature] **Date:** 5/17/19

**Signature of Owner (if different than applicant):** same **Date:** 5/17/19

**Permit Decision (to be completed by SDDOT).**

**Supporting Materials Required:**

| (Required) | | (Received) |
|---|---|---|
| ☐ | Access Approach Design | ☐ |
| ☐ | Vicinity Map | ☒ |
| ☐ | Traffic Volumes | ☐ |
| ☐ | Three Copies of Site Plan | ☐ |
| ☐ | Traffic Control Plan | ☐ |
| ☐ | Proof of Liability Insurance | ☐ |
| ☐ | Detailed Development Plan | ☐ |
| ☐ | Drainage Plan | ☐ |
| ☐ | Traffic Impact Study | ☐ |
| ☐ | Revegetation Plan | ☐ |
| ☐ | Other _____ | ☐ |

**Received by SDDOT:** Date: __/__/__

**Decision: (to be made after Application Review)**
- ☒ Access Approved
- ☐ Access Approved with Variance: _____
- ☐ Access Denied

**Terms and Conditions of Approval (or Reason for Denial)**

**Access Must be Constructed By:** __/__/__

**SDDOT Area Engineer Signature:** [signature]
**Date:** 5/22/19

**SDDOT Area:**
Area Office: Yankton
Contact Person: Rod Gall
Contact Phone: 605-668-2929
Permit Number: YA-~~1-2019~~ 2019-1

Distribution: Original – Owner; Copies – Access Management, Area Office v.10/2005

DOT-166

## SDDOT Highway Access Permit Application Review Sheet (to be completed by SDDOT)

**Highway Access Classification: (check one)**

- [ ] Expressway
- [ ] Free Flow Urban
- [ ] Intermediate Urban
- [ ] Urban Developed
- [ ] Urban Fringe
- [x] Rural

**Highway** 46
**MRM + Displacement** 299 + 393
**Left** [x] **Right** [ ]
**Average Daily Traffic** 778
**Accidents (three years)** 1.41

**Highway Alignment to Left of Access** (as seen when standing on access)

- [x] Straight
- [ ] Turns left
- [ ] Turns right

Stopping Sight Distance: 1100 ft.
Entering Sight Distance: 1100 ft.
Posted Speed Limit: 65 mph

- [x] Flat
- [ ] Slopes up
- [ ] Slopes down

- [x] 0-3% grade
- [ ] 3-5% grade
- [ ] >5% grade

**Highway Alignment to Right of Access** (as seen when standing on access)

- [x] Straight
- [ ] Turns left
- [ ] Turns right

Stopping Sight Distance: 1200 ft.
Entering Sight Distance: 1200 ft.
Posted Speed Limit 65 mph

- [x] Flat
- [ ] Slopes up
- [ ] Slopes down

- [x] 0-3% grade
- [ ] 3-5 % grade
- [ ] >5% grade

**Significant Design and Potential Impact Considerations (check all that apply and explain checked items):**

- [ ] Sidewalks or Bike Paths
- [ ] Curb & Gutter
- [ ] On-Street Parking
- [ ] Shoulder Width
- [ ] Historical Resources
- [ ] Surface Drainage
- [ ] Drainage Structures
- [ ] Major Structures
- [ ] Guard Rail
- [ ] Above-Ground Utilities
- [ ] Railroad Tracks
- [ ] Distance to Nearby Streets, Both Directions
- [ ] Distance to Nearby Driveways, Both Directions
- [ ] Others Streets with Access or Available Access
- [ ] Traffic Control Devices or Relocation Needed
- [ ] Median Crossovers

Explain impact on design: No change in access. The approach will be used frequently during windmill construction. Signs shall be used on both sides of the approach, (Truck Crossing) during construction.

**SDDOT Region Traffic Engineer Review (optional):**
Comments:

Signature: _____ date: ___/___/___

**SDDOT Access Management Review (optional):**
Comments:

Signature: _____ date: ___/___/___

**APPROACH DESIGN SKETCH**

**List Attachments:**

- [ ] Driveway details
- [ ] Culvert details
- [ ] Mailbox details
- [ ] Fencing details
- [ ] Cattle guard
- [ ] Sidewalk details
- [ ] Median crossovers
- [ ] Recreation paths
- [ ] Rail crossings
- [ ] Auxiliary lanes
- [ ] Storm sewer
- [ ] Pavement
- [ ] Curb & gutter
- [ ] Traffic Control
- [ ] Sign/signal/marking
- [ ] Other

**SDDOT Review Performed by:** Rod Gall **Date:** 05/26/19


Untitled Map
Write a description for your map.
Legend
405th Ave
46
Google Earth
© 2018 Google
1000 ft
N

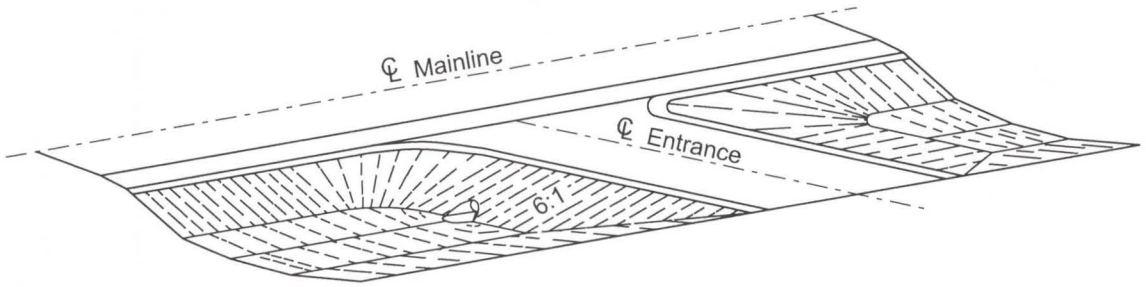


## PERSPECTIVE OF ENTRANCE

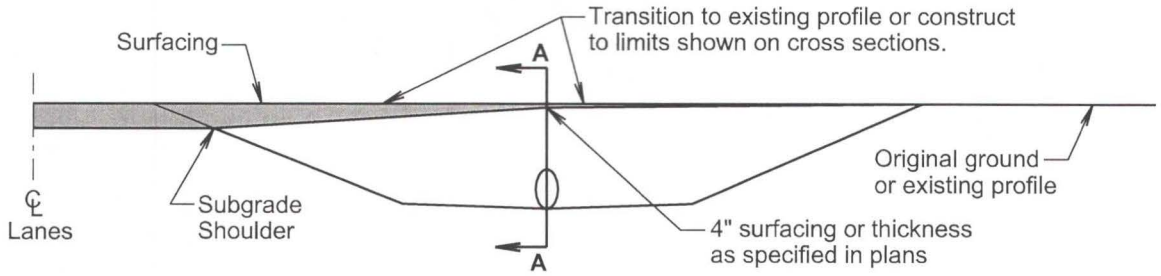


## ELEVATION VIEW
(Entrance)

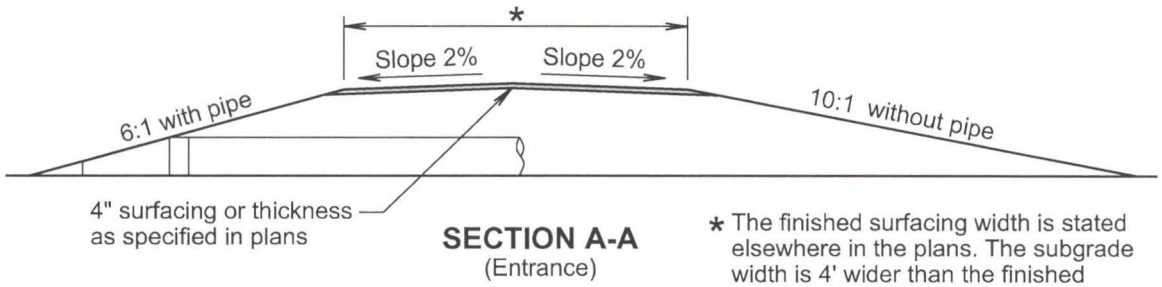


## SECTION A-A
(Entrance)

* The finished surfacing width is stated elsewhere in the plans. The subgrade width is 4' wider than the finished surfacing width unless stated otherwise in the plans.

**GENERAL NOTES:**

The ditch section shown above in the perspective and elevation view is only for illustrative purpose.

A 6:1 inslope will be constructed for an entrance when a pipe is required. A 10:1 inslope will be constructed when a pipe is not required.

Pipe length will be adjusted if necessary during construction to obtain the 6:1 slope. For grading projects, the pipe length is estimated typically using a 4" thickness of surfacing directly over the subgrade above the pipe.

The transition area between the mainline inslope and the approach inslope for entrances will be rounded to eliminate an abrupt transition.

The turning radii will be 35' for intersecting roads and entrances unless stated otherwise in the plans.

September 14, 2018

| | | | |
|---|---|---|---|
| Published Date: 2nd Qtr. 2019 | SDDOT | INTERSECTING ROADS AND ENTRANCES | PLATE NUMBER 120.01 |
| | | | Sheet 1 of 2 |

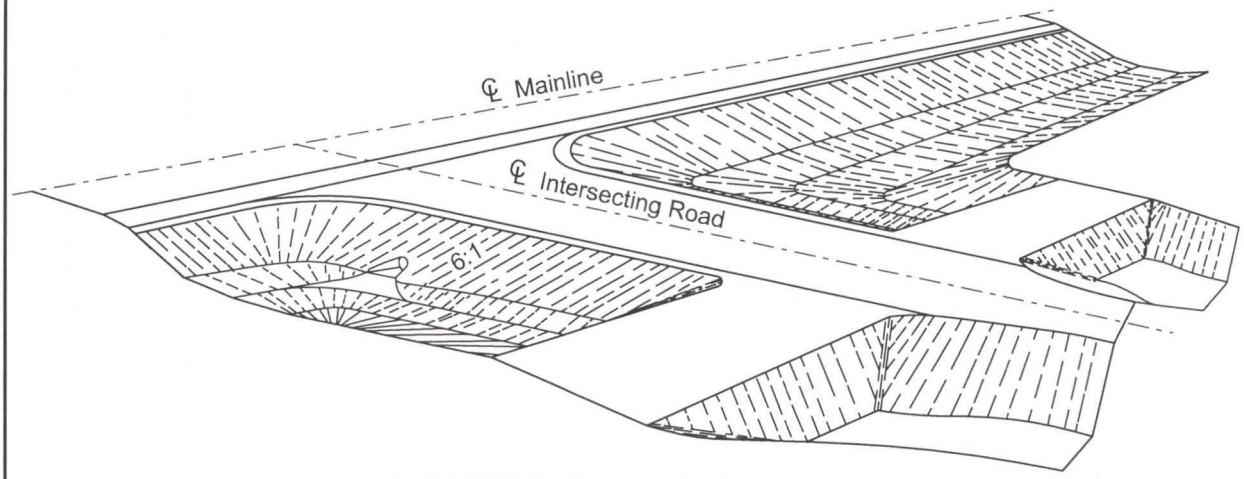


## PERSPECTIVE OF INTERSECTING ROAD

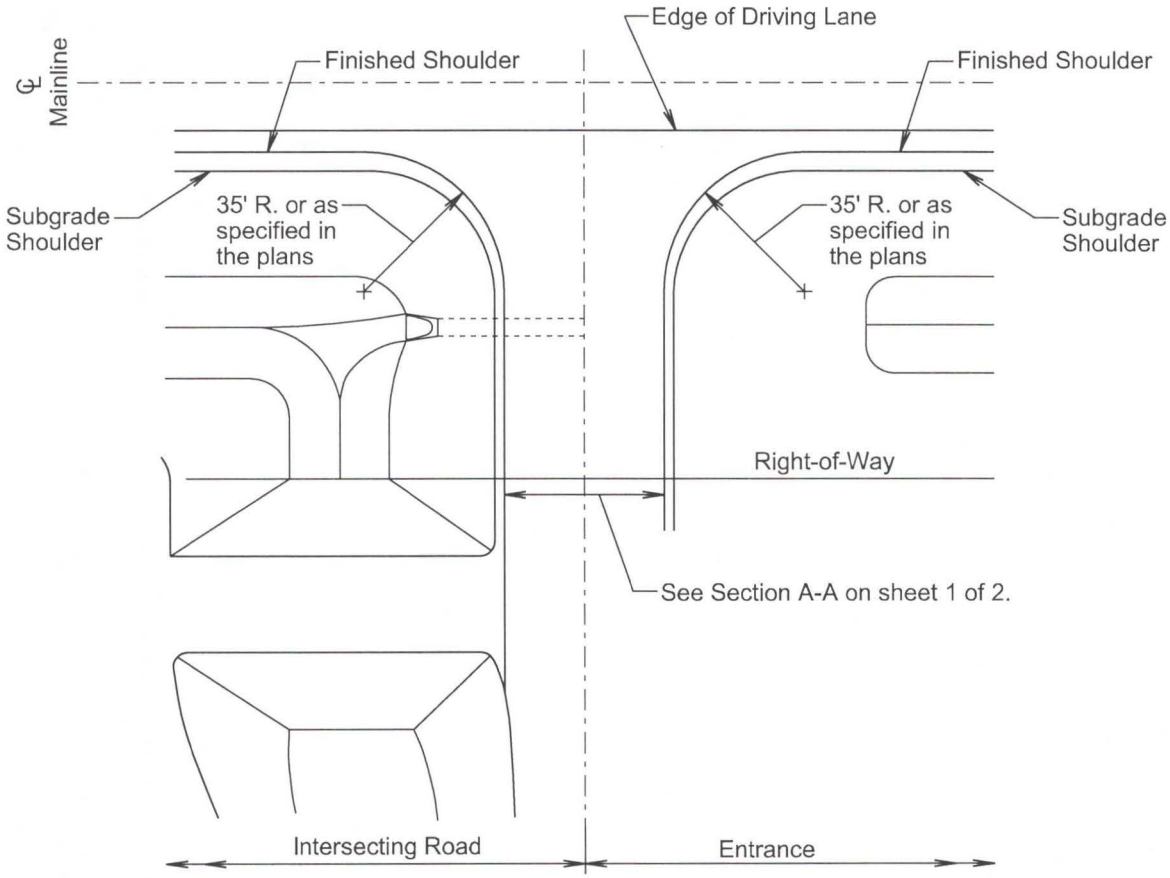


## PLAN VIEW

September 14, 2018

| | | | |
|---|---|---|---|
| Published Date: 2nd Qtr. 2019 | SDDOT | INTERSECTING ROADS AND ENTRANCES | PLATE NUMBER 120.01<br>Sheet 2 of 2 |

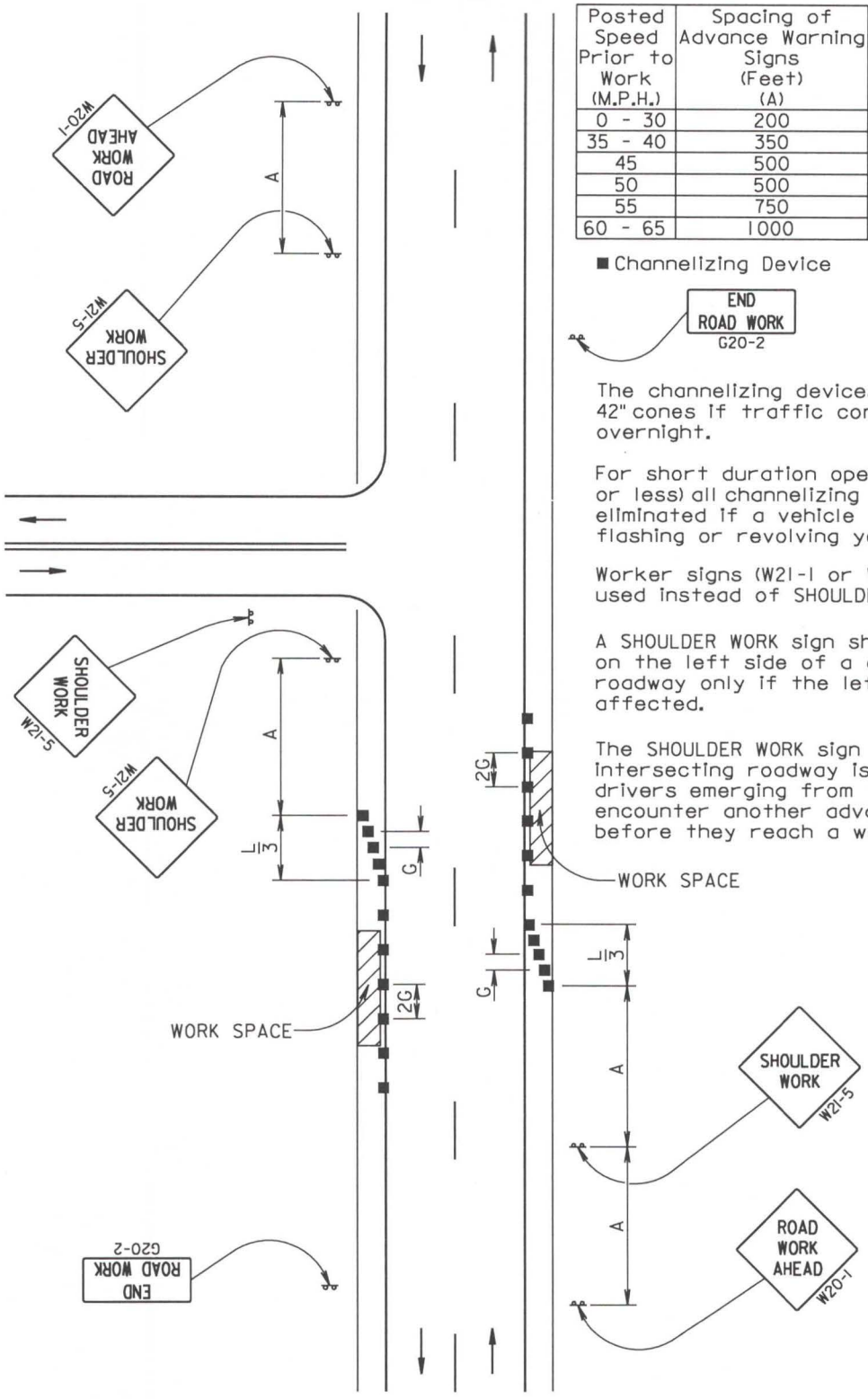


| Posted Speed Prior to Work (M.P.H.) | Spacing of Advance Warning Signs (Feet) (A) | Taper Length (Feet) (L) | Spacing of Channelizing Devices (Feet) (G) |
|---|---|---|---|
| 0 - 30 | 200 | 180 | 25 |
| 35 - 40 | 350 | 320 | 25 |
| 45 | 500 | 600 | 25 |
| 50 | 500 | 600 | 50 |
| 55 | 750 | 660 | 50 |
| 60 - 65 | 1000 | 780 | 50 |

■ Channelizing Device

END ROAD WORK
G20-2

The channelizing devices shall be drums or 42" cones if traffic control must remain overnight.

For short duration operations (1 hour or less) all channelizing devices may be eliminated if a vehicle with an activated flashing or revolving yellow light is used.

Worker signs (W21-1 or W21-1a) may be used instead of SHOULDER WORK signs.

A SHOULDER WORK sign should be placed on the left side of a divided or one-way roadway only if the left shoulder is affected.

The SHOULDER WORK sign on an intersecting roadway is not required if drivers emerging from that roadway will encounter another advance warning sign before they reach a work activity area.

June 3, 2016

| | | | |
|---|---|---|---|
| Published Date: 2nd Qtr. 2019 | SDDOT | GUIDES FOR TRAFFIC CONTROL DEVICES WORK ON SHOULDERS | PLATE NUMBER 634.03 |
| | | | Sheet 1 of 1 |

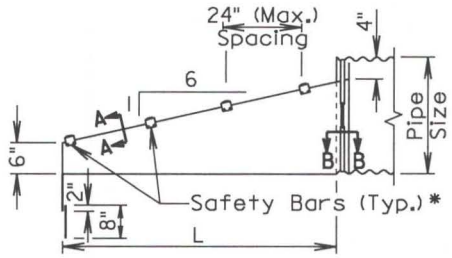


ELEVATION VIEW

*Number of bars required will vary depending on the length of the end section.

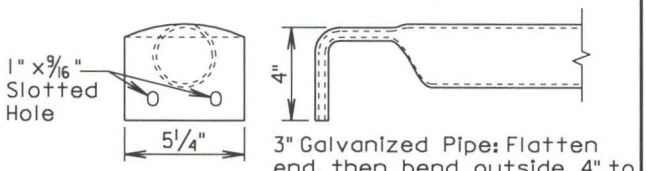


3" Galvanized Pipe: Flatten end, then bend outside 4" to match end section sides.

DETAIL OF SAFETY BARS

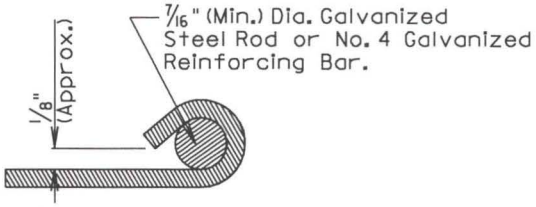


SECTION A-A

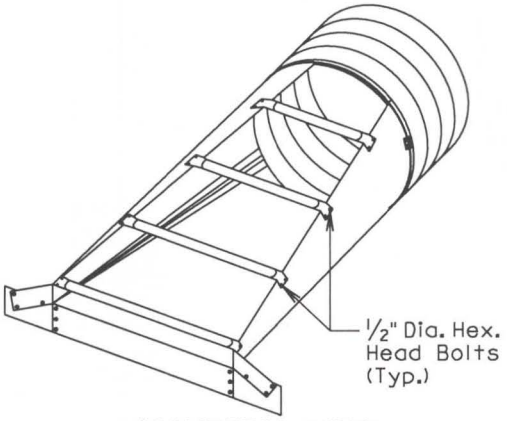


ISOMETRIC VIEW

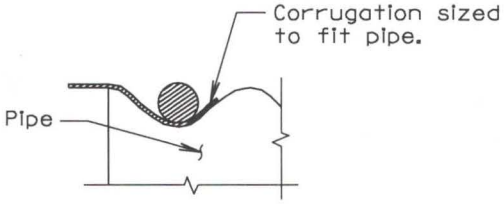


SECTION B-B

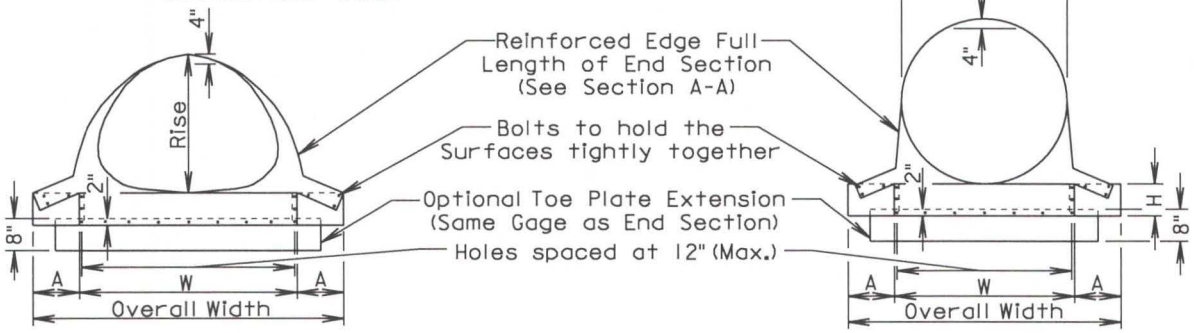


FRONT VIEW

FRONT VIEW

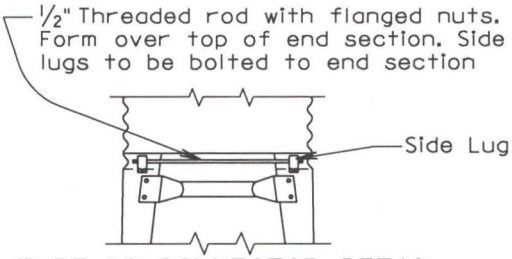


TYPE #2 CONNECTOR DETAIL
(For 30" and Larger)
(For 21" X 15" and Larger)

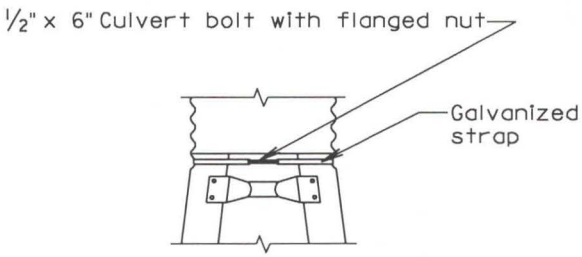


TYPE #1 CONNECTOR DETAIL
(For 15" Through 24")

June 26, 2015

| | | | |
|---|---|---|---|
| Published Date: 2nd Qtr. 2019 | SDDOT | C. M. P. SAFETY ENDS | PLATE NUMBER 450.38<br>Sheet 1 of 2 |

| ARCH C.M.P. SAFETY ENDS | | | | | | | | | | |
|---|---|---|---|---|---|---|---|---|---|---|
| Equv. Dia. (Inch) | (Inches) | | Min. Thick. | | Dimensions (Inches) | | | | L Dimensions | |
| | Span | Rise | Inch | Gage | A | H | W | Overall Width | Slope | Length (Inch) |
| 18 | 21 | 15 | .064 | 16 | 8 | 6 | 27 | 43 | 6:1 | 30 |
| 21 | 24 | 18 | .064 | 16 | 8 | 6 | 30 | 46 | 6:1 | 48 |
| 24 | 28 | 20 | .064 | 16 | 8 | 6 | 34 | 50 | 6:1 | 60 |
| 30 | 35 | 24 | .079 | 14 | 12 | 9 | 41 | 65 | 6:1 | 84 |
| 36 | 42 | 29 | .109 | 12 | 12 | 9 | 48 | 72 | 6:1 | 114 |
| 42 | 49 | 33 | .109 | 12 | 16 | 12 | 55 | 87 | 6:1 | 138 |
| 48 | 57 | 38 | .109 | 12 | 16 | 12 | 63 | 95 | 6:1 | 168 |
| 54 | 64 | 43 | .109 | 12 | 16 | 12 | 70 | 102 | 6:1 | 198 |
| 60 | 71 | 47 | .109 | 12 | 16 | 12 | 77 | 109 | 6:1 | 222 |
| 72 | 83 | 57 | .109 | 12 | 16 | 12 | 89 | 121 | 6:1 | 282 |

| CIRCULAR C.M.P. SAFETY ENDS | | | | | | | | |
|---|---|---|---|---|---|---|---|---|
| Pipe Dia. (Inch) | Min. Thick. | | Dimensions (Inches) | | | | L Dimensions | |
| | Inch | Gage | A | H | W | Overall Width | Slope | Length (Inch) |
| 15 | .064 | 16 | 8 | 6 | 21 | 37 | 6:1 | 30 |
| 18 | .064 | 16 | 8 | 6 | 24 | 40 | 6:1 | 48 |
| 21 | .064 | 16 | 8 | 6 | 27 | 43 | 6:1 | 66 |
| 24 | .064 | 16 | 8 | 6 | 30 | 46 | 6:1 | 84 |
| 30 | .109 | 12 | 12 | 9 | 36 | 60 | 6:1 | 120 |
| 36 | .109 | 12 | 12 | 9 | 42 | 66 | 6:1 | 156 |
| 42 | .109 | 12 | 16 | 12 | 48 | 80 | 6:1 | 192 |
| 48 | .109 | 12 | 16 | 12 | 54 | 86 | 6:1 | 228 |
| 54 | .109 | 12 | 16 | 12 | 60 | 92 | 6:1 | 264 |
| 60 | .109 | 12 | 16 | 12 | 66 | 98 | 6:1 | 300 |

GENERAL NOTES:

Safety ends shall be fabricated from galvanized steel conforming to the requirements of the Specifications.

Safety bars shall be fabricated from steel schedule 40 pipe in conformance with ASTM A53, grade B or HSS 3.5X.216 in conformance with ASTM A500, grade B.

Slotted holes for safety bar attachment shall be provided for all end sections.

Attachment to circular pipes 15" through 24" diameter shall be made with Type #1 straps. All other sizes shall be attached with Type #2 rods and lugs.

When stated in the plans, optional toe plate extension shall be punched and bolted to end section apron lip with 3/8" diameter galvanized bolts. Steel for toe plate extension shall be same gauge as end section. Dimensions shall be overall width less 6" by 8" high.

Installation shall be performed in accordance with the Specifications.

Cost of all work and materials required for fabrication and installation of safety ends shall be incidental to the bid items for the various sizes of safety ends.

*June 26, 2015*

| | | | |
|---|---|---|---|
| *Published Date: 2nd Qtr. 2019* | SDDOT | **C. M. P. SAFETY ENDS** | PLATE NUMBER 450.38 |
| | | | *Sheet 2 of 2* |

DOT-166

T-41

# Application for Highway Access Permit
# South Dakota Department of Transportation

**Permit Application (to be completed by applicant).**

**Instructions:** Please contact the local South Dakota Department of Transportation office to determine what supporting documents must accompany this application. Please submit a separate application and supporting documentation for each access requested. Attach additional sheets as necessary. Please print or type. Owner and applicant agree to comply with special and standard conditions if access permitted.

**Property Owner:**
Name(s): Prevailing Wind Park, LLC
Mailing Address: 2180 S 1300 E ste 600
City, State, Zip: Salt Lake City, UT 84106
Daytime Phone: 325-207-9064

**Applicant (if different from Owner):**
Name(s):
Mailing Address:
City, State, Zip
Daytime Phone:

**Property to be Served by Approach:**
County: Charles Mix
Section: 1 Township: Lone Tree
Range: 65-W
Or
Subdivision: _____ Block/Lot: _____
Street Address:
City:

**State Highway to be Accessed by Approach:**
State Highway Number: 46
Access would be 2625 feet (north, south, (east) or west) from SD 50 (nearest cross street).

**Land Use of Property to be Served (check one):**
- ☐ Agricultural: acres served _____
- ☐ Business: type _____ total square footage of buildings: ____ number of employees _____
- ☐ Residential: number of single-family dwellings _____, or number of multi-family dwellings _____.
- ☑ Other: describe Wind Turbine Access

**Type of Permit Requested (check one)**
- ☐ New approach
- ☑ Change in use
- ☐ Temporary access
- ☐ Improve existing access
- ☐ Relocate existing access
- ☐ Remove existing access

**Requested Approach Width (check one)**
24' ☑ 30' ☐ 36' ☐ 40' ☐

**Local Government Reviews:**

**County:** _____
Comments:
Concurrence signature: _____ Date: _____

**Municipality:** _____
Comments:
Concurrence signature: _____ Date: _____

**Estimated Date of Construction:** June, 2019

I, the undersigned, request permission to construct or modify an access approach subject to the rules and regulations set forth in SDCL 70:09.

**Signature of Applicant:** [signature] **Date:** 5/17/19

**Signature of Owner (if different than applicant):** Same **Date:** 5/17/19

**Permit Decision (to be completed by SDDOT).**

**Supporting Materials Required:**

| (Required) | | (Received) |
|---|---|---|
| ☐ | Access Approach Design | ☐ |
| ☐ | Vicinity Map | ☐ |
| ☐ | Traffic Volumes | ☐ |
| ☐ | Three Copies of Site Plan | ☐ |
| ☐ | Traffic Control Plan | ☐ |
| ☐ | Proof of Liability Insurance | ☐ |
| ☐ | Detailed Development Plan | ☐ |
| ☐ | Drainage Plan | ☐ |
| ☐ | Traffic Impact Study | ☐ |
| ☐ | Revegetation Plan | ☐ |
| ☐ | Other _____ | ☐ |

**Received by SDDOT:** Date: 5/17/19

**Decision: (to be made after Application Review)**
- ☒ Access Approved
- ☐ Access Approved with Variance: _____
- ☐ Access Denied

**Terms and Conditions of Approval (or Reason for Denial)**

**Access Must be Constructed By:** ___/___/___

**SDDOT Area Engineer Signature:** [signature]
**Date:** 5/28/19

**SDDOT Area:**
Area Office: Yankton
Contact Person: Rod Goll
Contact Phone: 605-668-2929
Permit Number: YA-2019-2

Distribution: Original – Owner; Copies – Access Management, Area Office v.10/2005

DOT-166

## SDDOT Highway Access Permit Application Review Sheet (to be completed by SDDOT)

**Highway Access Classification: (check one)**

- [ ] Expressway
- [ ] Free Flow Urban
- [ ] Intermediate Urban
- [ ] Urban Developed
- [ ] Urban Fringe
- [x] Rural

**Highway** 46
**MRM + Displacement** 297 + 767
**Left** ☐ **Right** ☒
**Average Daily Traffic** 778
**Accidents (three years)** 1, 41

**Highway Alignment to Left of Access** (as seen when standing on access)

- [x] Straight
- [ ] Turns left
- [ ] Turns right

Stopping Sight Distance: 1200+ ft.
Entering Sight Distance: 1200+ ft.
Posted Speed Limit: 65 mph

- [x] Flat
- [ ] Slopes up
- [ ] Slopes down

- [x] 0-3% grade
- [ ] 3-5% grade
- [ ] >5% grade

**Highway Alignment to Right of Access** (as seen when standing on access)

- [x] Straight
- [ ] Turns left
- [ ] Turns right

Stopping Sight Distance: 1200+ ft.
Entering Sight Distance: 1200+ ft.
Posted Speed Limit 65 mph

- [x] Flat
- [ ] Slopes up
- [ ] Slopes down

- [x] 0-3% grade
- [ ] 3-5 % grade
- [ ] >5% grade

**Significant Design and Potential Impact Considerations (check all that apply and explain checked items):**

- [ ] Sidewalks or Bike Paths
- [ ] Curb & Gutter
- [ ] On-Street Parking
- [ ] Shoulder Width
- [ ] Historical Resources
- [ ] Surface Drainage
- [ ] Drainage Structures
- [ ] Major Structures
- [ ] Guard Rail
- [ ] Above-Ground Utilities
- [ ] Railroad Tracks
- [ ] Distance to Nearby Streets, Both Directions
- [ ] Distance to Nearby Driveways, Both Directions
- [ ] Others Streets with Access or Available Access
- [ ] Traffic Control Devices or Relocation Needed
- [ ] Median Crossovers

Explain impact on design: No change in access. The approach will be used frequently during construction of windmills. Signs (Truck Crossing) should be used during construction of wind mills.

**SDDOT Region Traffic Engineer Review (optional):**
Comments:

Signature: _____ date: ___/___/___

**SDDOT Access Management Review (optional):**
Comments:

Signature: _____ date: ___/___/___

**APPROACH DESIGN SKETCH**

**List Attachments:**

- [ ] Driveway details
- [ ] Culvert details
- [ ] Mailbox details
- [ ] Fencing details
- [ ] Cattle guard
- [ ] Sidewalk details
- [ ] Median crossovers
- [ ] Recreation paths
- [ ] Rail crossings
- [ ] Auxiliary lanes
- [ ] Storm sewer
- [ ] Pavement
- [ ] Curb & gutter
- [ ] Traffic Control
- [ ] Sign/signal/marking
- [ ] Other

**SDDOT Review Performed by:** Rod Gall **Date:** 05/28/19


Untitled Map
Write a description for your map.
Legend
403rd Ave
46
297th St
Google Earth
© 2018 Google
N
1000 ft

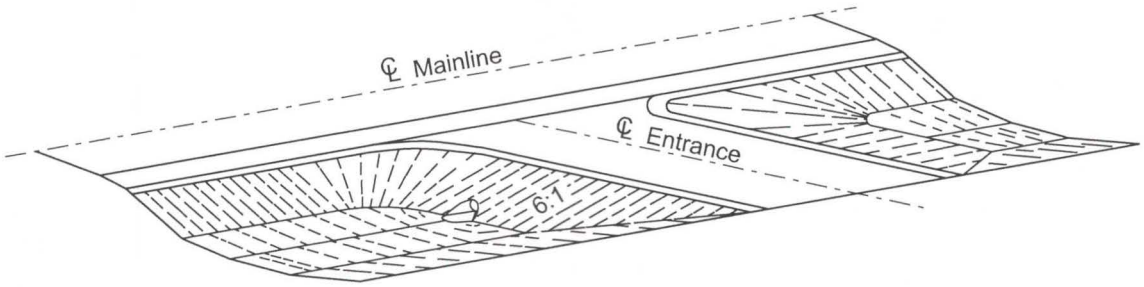


**PERSPECTIVE OF ENTRANCE**

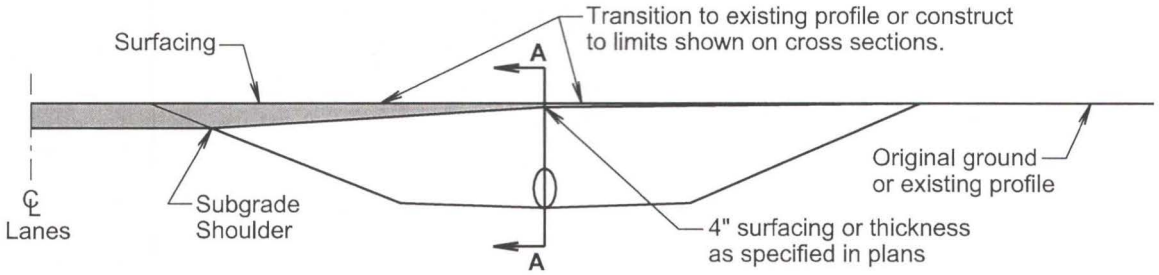


**ELEVATION VIEW**
(Entrance)

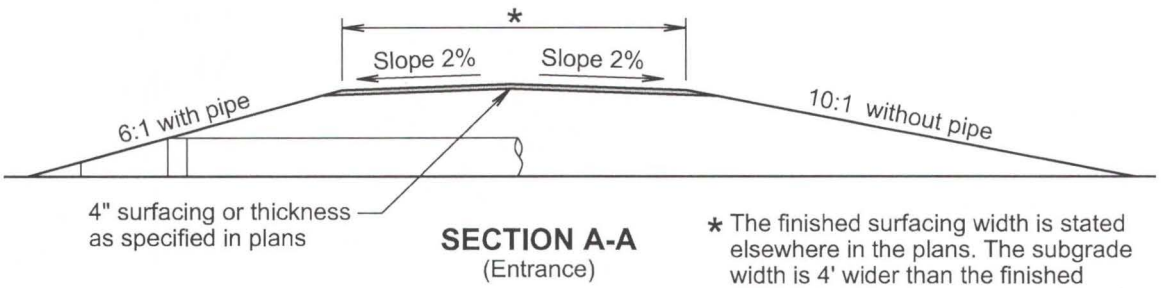


**SECTION A-A**
(Entrance)

* The finished surfacing width is stated elsewhere in the plans. The subgrade width is 4' wider than the finished surfacing width unless stated otherwise in the plans.

**GENERAL NOTES:**

The ditch section shown above in the perspective and elevation view is only for illustrative purpose.

A 6:1 inslope will be constructed for an entrance when a pipe is required. A 10:1 inslope will be constructed when a pipe is not required.

Pipe length will be adjusted if necessary during construction to obtain the 6:1 slope. For grading projects, the pipe length is estimated typically using a 4" thickness of surfacing directly over the subgrade above the pipe.

The transition area between the mainline inslope and the approach inslope for entrances will be rounded to eliminate an abrupt transition.

The turning radii will be 35' for intersecting roads and entrances unless stated otherwise in the plans.

*September 14, 2018*

| | | | |
|---|---|---|---|
| *Published Date: 2nd Qtr. 2019* | SDDOT | *INTERSECTING ROADS AND ENTRANCES* | PLATE NUMBER 120.01 |
| | | | Sheet 1 of 2 |

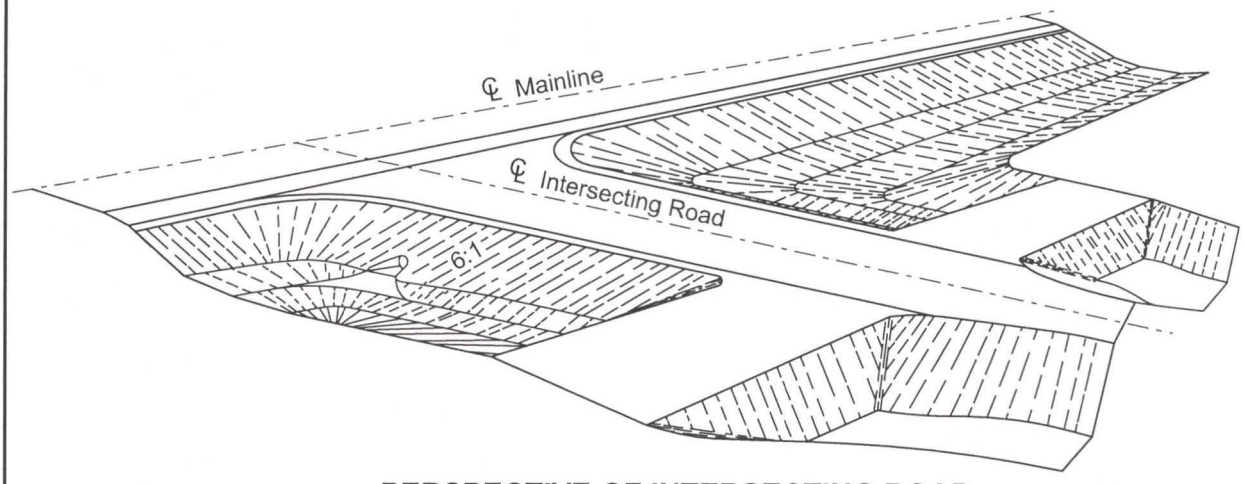


## PERSPECTIVE OF INTERSECTING ROAD

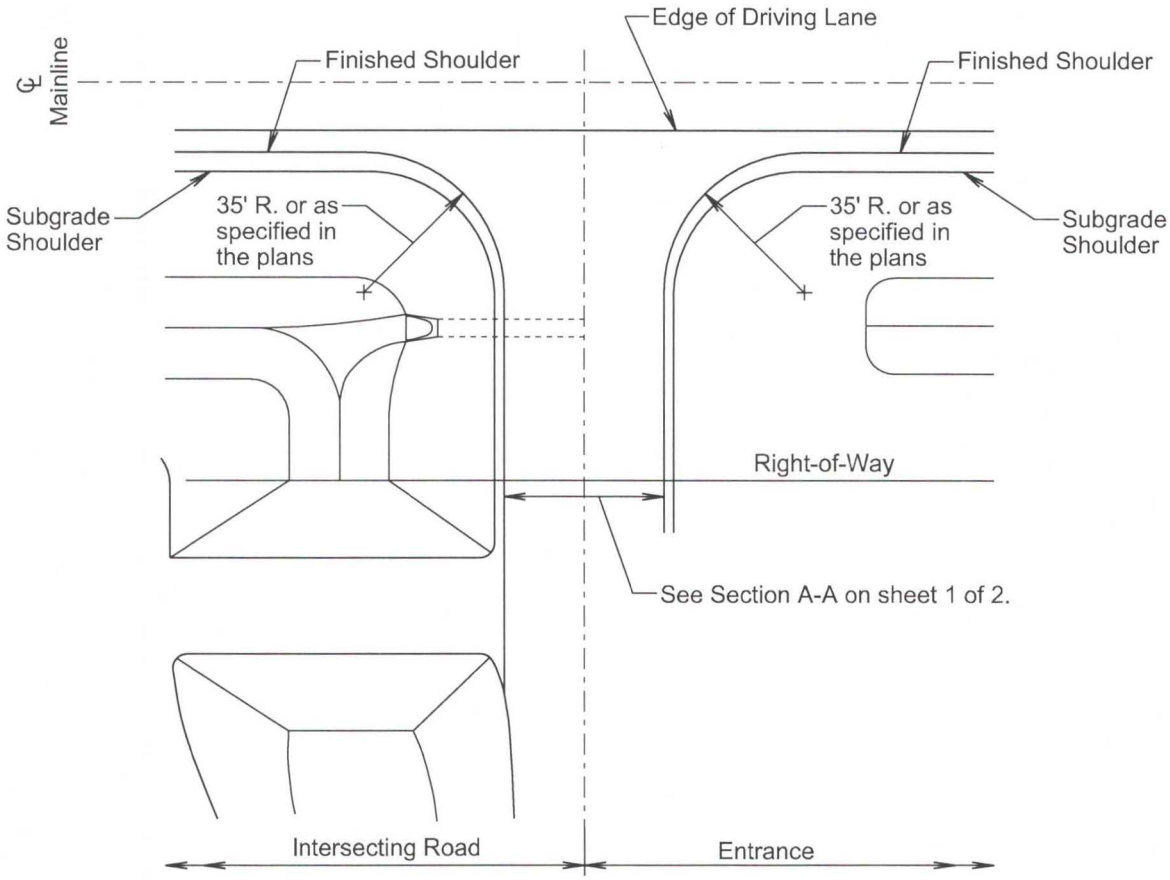


## PLAN VIEW

September 14, 2018

| | | | |
|---|---|---|---|
| Published Date: 2nd Qtr. 2019 | SDDOT | INTERSECTING ROADS AND ENTRANCES | PLATE NUMBER 120.01<br>Sheet 2 of 2 |

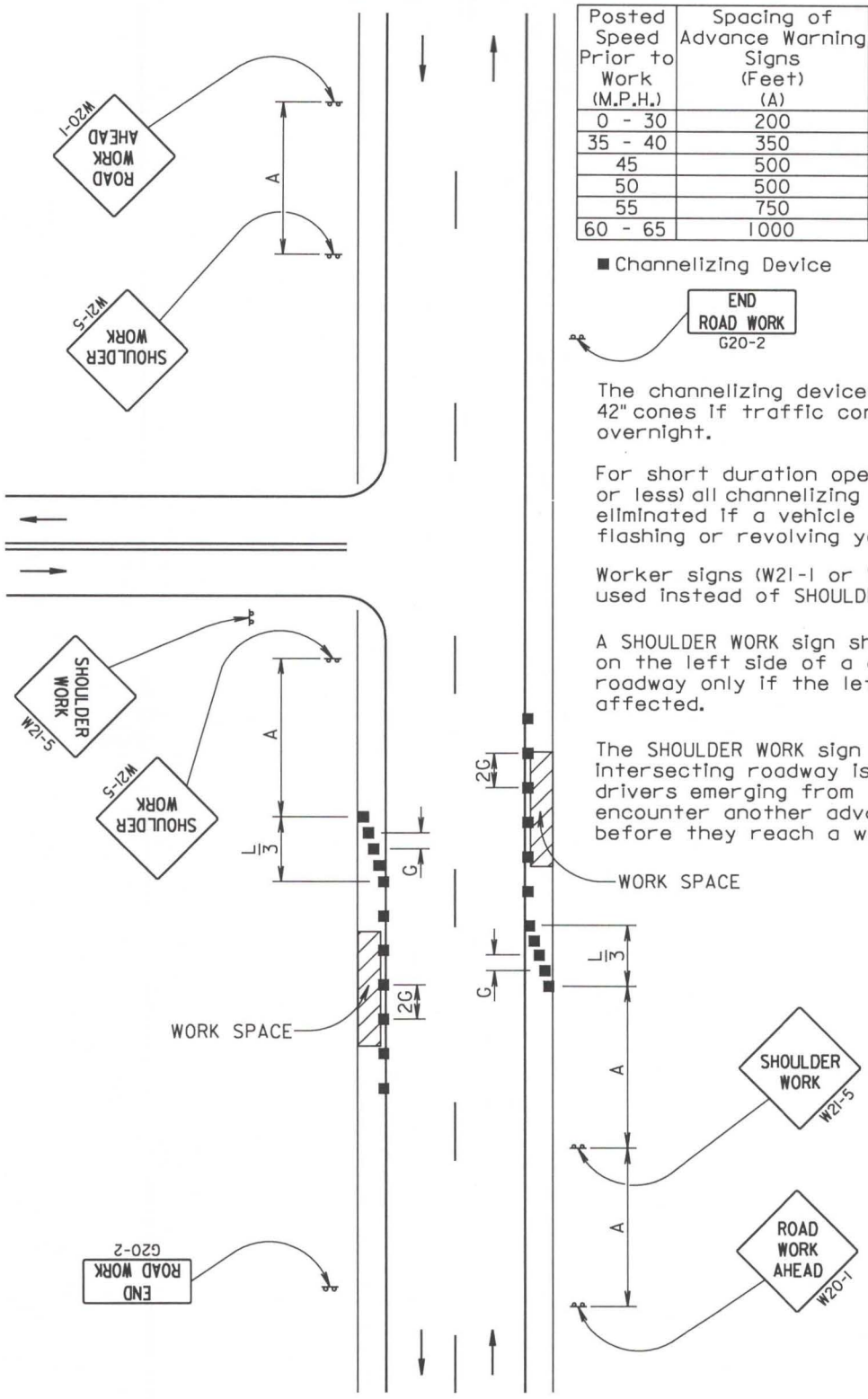


| Posted Speed Prior to Work (M.P.H.) | Spacing of Advance Warning Signs (Feet) (A) | Taper Length (Feet) (L) | Spacing of Channelizing Devices (Feet) (G) |
|---|---|---|---|
| 0 - 30 | 200 | 180 | 25 |
| 35 - 40 | 350 | 320 | 25 |
| 45 | 500 | 600 | 25 |
| 50 | 500 | 600 | 50 |
| 55 | 750 | 660 | 50 |
| 60 - 65 | 1000 | 780 | 50 |

■ Channelizing Device

The channelizing devices shall be drums or 42" cones if traffic control must remain overnight.

For short duration operations (1 hour or less) all channelizing devices may be eliminated if a vehicle with an activated flashing or revolving yellow light is used.

Worker signs (W21-1 or W21-1a) may be used instead of SHOULDER WORK signs.

A SHOULDER WORK sign should be placed on the left side of a divided or one-way roadway only if the left shoulder is affected.

The SHOULDER WORK sign on an intersecting roadway is not required if drivers emerging from that roadway will encounter another advance warning sign before they reach a work activity area.

June 3, 2016

Published Date: 2nd Qtr. 2019

SDDOT

# GUIDES FOR TRAFFIC CONTROL DEVICES WORK ON SHOULDERS

PLATE NUMBER 634.03

Sheet 1 of 1

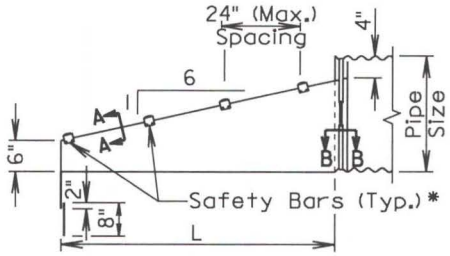


ELEVATION VIEW

*Number of bars required will vary depending on the length of the end section.

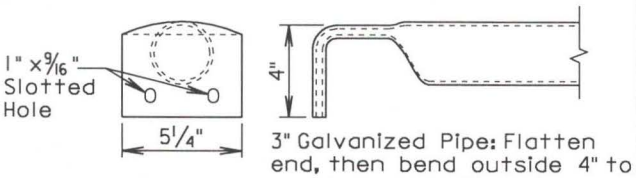


3" Galvanized Pipe: Flatten end, then bend outside 4" to match end section sides.

DETAIL OF SAFETY BARS

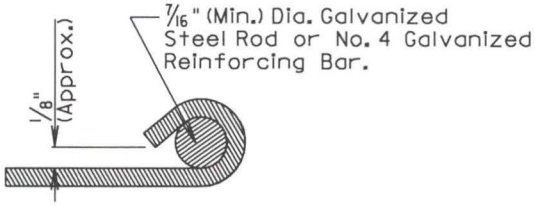


SECTION A-A

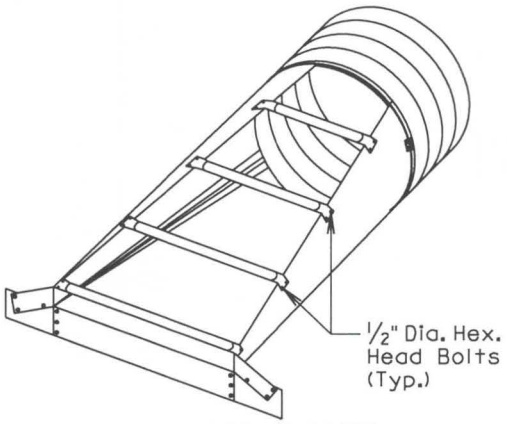


ISOMETRIC VIEW

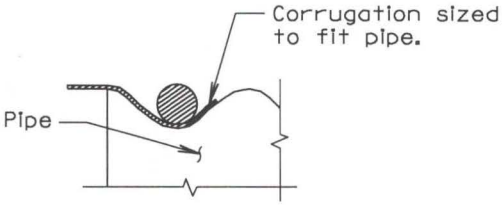


SECTION B-B

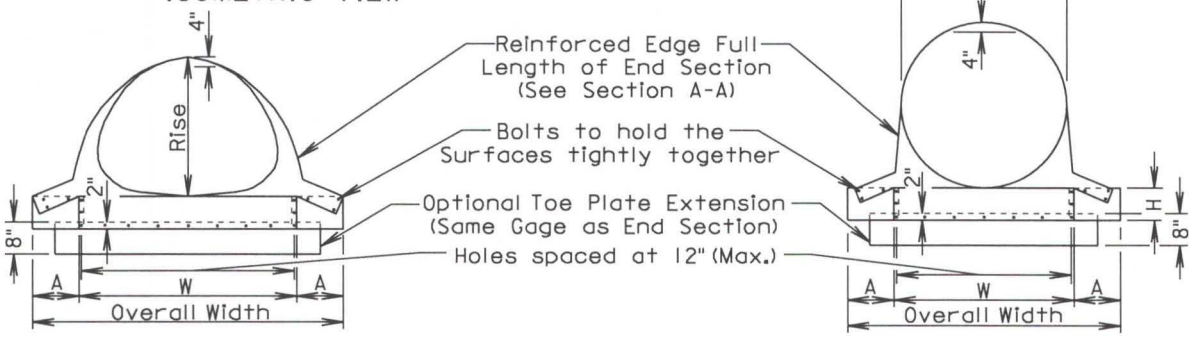


FRONT VIEW

FRONT VIEW

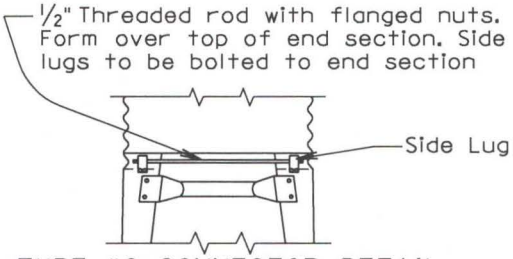


TYPE #2 CONNECTOR DETAIL
(For 30" and Larger)
(For 21" X 15" and Larger)

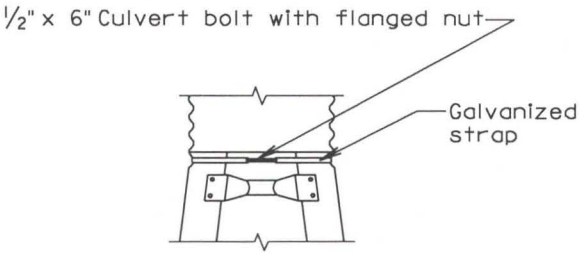


TYPE #1 CONNECTOR DETAIL
(For 15" Through 24")

June 26, 2015

| | | | |
|---|---|---|---|
| Published Date: 2nd Qtr. 2019 | SDDOT | C. M. P. SAFETY ENDS | PLATE NUMBER 450.38 |
| | | | Sheet 1 of 2 |

| ARCH C.M.P. SAFETY ENDS | | | | | | | | | | |
|---|---|---|---|---|---|---|---|---|---|---|
| Equv. Dia. (Inch) | (Inches) | | Min. Thick. | | Dimensions (Inches) | | | | L Dimensions | |
| | Span | Rise | Inch | Gage | A | H | W | Overall Width | Slope | Length (Inch) |
| 18 | 21 | 15 | .064 | 16 | 8 | 6 | 27 | 43 | 6:1 | 30 |
| 21 | 24 | 18 | .064 | 16 | 8 | 6 | 30 | 46 | 6:1 | 48 |
| 24 | 28 | 20 | .064 | 16 | 8 | 6 | 34 | 50 | 6:1 | 60 |
| 30 | 35 | 24 | .079 | 14 | 12 | 9 | 41 | 65 | 6:1 | 84 |
| 36 | 42 | 29 | .109 | 12 | 12 | 9 | 48 | 72 | 6:1 | 114 |
| 42 | 49 | 33 | .109 | 12 | 16 | 12 | 55 | 87 | 6:1 | 138 |
| 48 | 57 | 38 | .109 | 12 | 16 | 12 | 63 | 95 | 6:1 | 168 |
| 54 | 64 | 43 | .109 | 12 | 16 | 12 | 70 | 102 | 6:1 | 198 |
| 60 | 71 | 47 | .109 | 12 | 16 | 12 | 77 | 109 | 6:1 | 222 |
| 72 | 83 | 57 | .109 | 12 | 16 | 12 | 89 | 121 | 6:1 | 282 |

| CIRCULAR C.M.P. SAFETY ENDS | | | | | | | | |
|---|---|---|---|---|---|---|---|---|
| Pipe Dia. (Inch) | Min. Thick. | | Dimensions (Inches) | | | | L Dimensions | |
| | Inch | Gage | A | H | W | Overall Width | Slope | Length (Inch) |
| 15 | .064 | 16 | 8 | 6 | 21 | 37 | 6:1 | 30 |
| 18 | .064 | 16 | 8 | 6 | 24 | 40 | 6:1 | 48 |
| 21 | .064 | 16 | 8 | 6 | 27 | 43 | 6:1 | 66 |
| 24 | .064 | 16 | 8 | 6 | 30 | 46 | 6:1 | 84 |
| 30 | .109 | 12 | 12 | 9 | 36 | 60 | 6:1 | 120 |
| 36 | .109 | 12 | 12 | 9 | 42 | 66 | 6:1 | 156 |
| 42 | .109 | 12 | 16 | 12 | 48 | 80 | 6:1 | 192 |
| 48 | .109 | 12 | 16 | 12 | 54 | 86 | 6:1 | 228 |
| 54 | .109 | 12 | 16 | 12 | 60 | 92 | 6:1 | 264 |
| 60 | .109 | 12 | 16 | 12 | 66 | 98 | 6:1 | 300 |

GENERAL NOTES:

Safety ends shall be fabricated from galvanized steel conforming to the requirements of the Specifications.

Safety bars shall be fabricated from steel schedule 40 pipe in conformance with ASTM A53, grade B or HSS 3.5X.216 in conformance with ASTM A500, grade B.

Slotted holes for safety bar attachment shall be provided for all end sections.

Attachment to circular pipes 15" through 24" diameter shall be made with Type #1 straps. All other sizes shall be attached with Type #2 rods and lugs.

When stated in the plans, optional toe plate extension shall be punched and bolted to end section apron lip with 3/8" diameter galvanized bolts. Steel for toe plate extension shall be same gauge as end section. Dimensions shall be overall width less 6" by 8" high.

Installation shall be performed in accordance with the Specifications.

Cost of all work and materials required for fabrication and installation of safety ends shall be incidental to the bid items for the various sizes of safety ends.

June 26, 2015

| | | | |
|---|---|---|---|
| Published Date: 2nd Qtr. 2019 | SDDOT | C. M. P. SAFETY ENDS | PLATE NUMBER 450.38 |
| | | | Sheet 2 of 2 |

DOT-166

# Application for Highway Access Permit
# South Dakota Department of Transportation

**Permit Application (to be completed by applicant).**

**Instructions:** Please contact the local South Dakota Department of Transportation office to determine what supporting documents must accompany this application. Please submit a separate application and supporting documentation for each access requested. Attach additional sheets as necessary. Please print or type. Owner and applicant agree to comply with special and standard conditions if access permitted.

**Property Owner:**
Name(s): Prevailing Wind Park, LLC
Mailing Address: 2180 S 1300 E ste 600
City, State, Zip: Salt Lake City, UT 84106
Daytime Phone: 325-207-9064

**Applicant (if different from Owner):**
Name(s):
Mailing Address:
City, State, Zip
Daytime Phone:

**Property to be Served by Approach:**
County: Charles Mix
Section: 12 Township: Lone Tree
Range: 62-W
Or
Subdivision: _____ Block/Lot: _____
Street Address:
City:

**State Highway to be Accessed by Approach:**
State Highway Number: 50
Access would be 1314 feet (north, south, east or west) from 298TH ST (nearest cross street).

**Land Use of Property to be Served (check one):**
- [ ] Agricultural: acres served _____
- [ ] Business: type _____ total square footage of buildings: ____ number of employees _____
- [ ] Residential: number of single-family dwellings _____, or number of multi-family dwellings _____.
- [x] Other: describe Wind Turbine Access

**Type of Permit Requested (check one)**
- [ ] New approach
- [x] Change in use
- [ ] Temporary access
- [ ] Improve existing access
- [ ] Relocate existing access
- [ ] Remove existing access

**Requested Approach Width (check one)**
24' [x] 30' [ ] 36' [ ] 40' [ ]

**Local Government Reviews:**

**County:**
Comments:
Concurrence signature: Date:

**Municipality:**
Comments:
Concurrence signature: Date:

**Estimated Date of Construction:** June, 2019

I, the undersigned, request permission to construct or modify an access approach subject to the rules and regulations set forth in SDCL 70:09.

**Signature of Applicant:** [signature] **Date:** 5/17/19

**Signature of Owner (if different than applicant):** SAME **Date:** 5/17/19

**Permit Decision (to be completed by SDDOT).**

**Supporting Materials Required:**

| (Required) | | (Received) |
|---|---|---|
| [ ] | Access Approach Design | [ ] |
| [ ] | Vicinity Map | [ ] |
| [ ] | Traffic Volumes | [ ] |
| [ ] | Three Copies of Site Plan | [ ] |
| [ ] | Traffic Control Plan | [ ] |
| [ ] | Proof of Liability Insurance | [ ] |
| [ ] | Detailed Development Plan | [ ] |
| [ ] | Drainage Plan | [ ] |
| [ ] | Traffic Impact Study | [ ] |
| [ ] | Revegetation Plan | [ ] |
| [ ] | Other _____ | [ ] |

**Received by SDDOT:** Date: 5/17/19

**Decision: (to be made after Application Review)**
- [x] Access Approved
- [ ] Access Approved with Variance: _____
- [ ] Access Denied

**Terms and Conditions of Approval (or Reason for Denial)**

**Access Must be Constructed By:** ___/___/___

**SDDOT Area Engineer Signature:** [signature]
**Date:** 05/28/19

**SDDOT Area:**
Area Office: Yankton
Contact Person: Rod Goll
Contact Phone: 605-668-2929
Permit Number: YA-2019-3

Distribution: Original – Owner; Copies – Access Management, Area Office

DOT-166

## SDDOT Highway Access Permit Application Review Sheet (to be completed by SDDOT)

**Highway Access Classification: (check one)**

- [ ] Expressway
- [ ] Free Flow Urban
- [ ] Intermediate Urban
- [ ] Urban Developed
- [ ] Urban Fringe
- [x] Rural

**Highway** 50
**MRM + Displacement** 337 + 900
**Left** ☒ **Right** ☐
**Average Daily Traffic** 1321
**Accidents (three years)** 0.56

**Highway Alignment to Left of Access** (as seen when standing on access)

- [x] Straight
- [ ] Turns left
- [ ] Turns right

Stopping Sight Distance: 1200 ft.
Entering Sight Distance: 1200 ft.
Posted Speed Limit: 65 mph

- [x] Flat
- [ ] Slopes up
- [ ] Slopes down

- [x] 0-3% grade
- [ ] 3-5% grade
- [ ] >5% grade

**Highway Alignment to Right of Access** (as seen when standing on access)

- [x] Straight
- [ ] Turns left
- [ ] Turns right

Stopping Sight Distance: 1200 ft.
Entering Sight Distance: 1200 ft.
Posted Speed Limit 65 mph

- [x] Flat
- [ ] Slopes up
- [ ] Slopes down

- [x] 0-3% grade
- [ ] 3-5 % grade
- [ ] >5% grade

**Significant Design and Potential Impact Considerations (check all that apply and explain checked items):**

- [ ] Sidewalks or Bike Paths
- [ ] Curb & Gutter
- [ ] On-Street Parking
- [ ] Shoulder Width
- [ ] Historical Resources
- [ ] Surface Drainage
- [ ] Drainage Structures
- [ ] Major Structures
- [ ] Guard Rail
- [ ] Above-Ground Utilities
- [ ] Railroad Tracks
- [ ] Distance to Nearby Streets, Both Directions
- [ ] Distance to Nearby Driveways, Both Directions
- [ ] Others Streets with Access or Available Access
- [ ] Traffic Control Devices or Relocation Needed
- [ ] Median Crossovers

Explain impact on design: No change in access. The approach will be used frequently during construction of the windmills. Signs (Truck Crossing) should be used during construction of wind mills.

**SDDOT Region Traffic Engineer Review (optional):**
Comments:

Signature: _____ date: ___/___/___

**SDDOT Access Management Review (optional):**
Comments:

Signature: _____ date: ___/___/___

**APPROACH DESIGN SKETCH**

**List Attachments:**

- [ ] Driveway details
- [ ] Culvert details
- [ ] Mailbox details
- [ ] Fencing details
- [ ] Cattle guard
- [ ] Sidewalk details
- [ ] Median crossovers
- [ ] Recreation paths
- [ ] Rail crossings
- [ ] Auxiliary lanes
- [ ] Storm sewer
- [ ] Pavement
- [ ] Curb & gutter
- [ ] Traffic Control
- [ ] Sign/signal/marking
- [ ] Other

**SDDOT Review Performed by:** Rod Goll **Date:** 5/28/19


Untitled Map
Write a description for your map.
Legend
50
403rd Ave
Google Earth
© 2018 Google
N
1000 ft

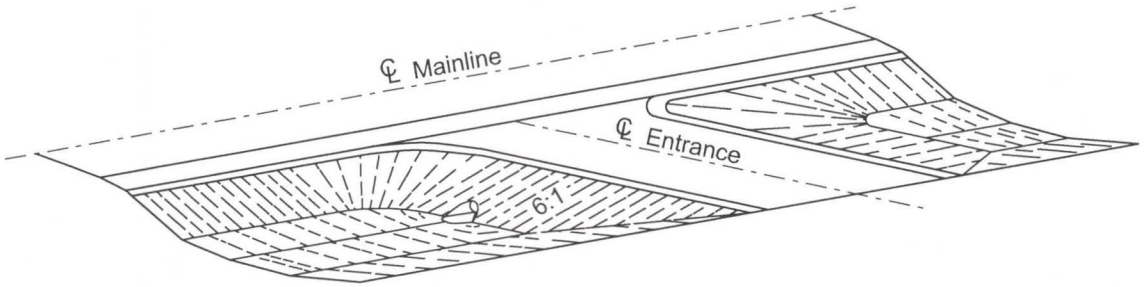


## PERSPECTIVE OF ENTRANCE

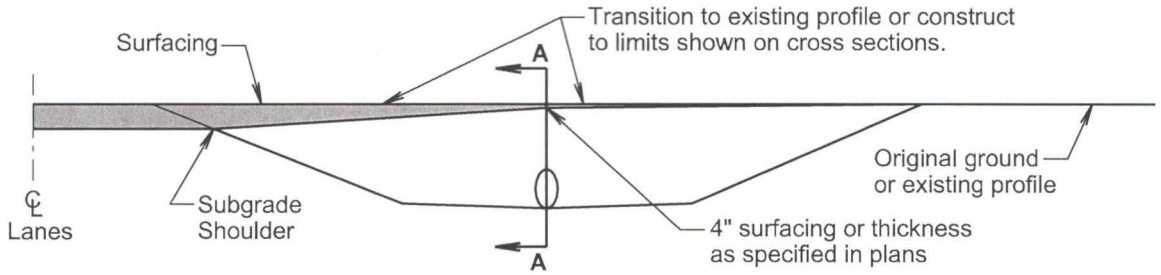


## ELEVATION VIEW
(Entrance)

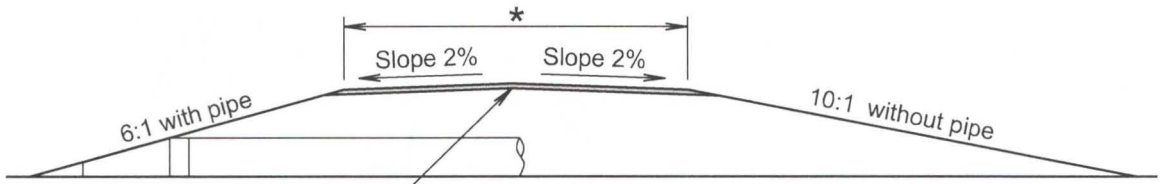


4" surfacing or thickness as specified in plans

## SECTION A-A
(Entrance)

* The finished surfacing width is stated elsewhere in the plans. The subgrade width is 4' wider than the finished surfacing width unless stated otherwise in the plans.

**GENERAL NOTES:**

The ditch section shown above in the perspective and elevation view is only for illustrative purpose.

A 6:1 inslope will be constructed for an entrance when a pipe is required. A 10:1 inslope will be constructed when a pipe is not required.

Pipe length will be adjusted if necessary during construction to obtain the 6:1 slope. For grading projects, the pipe length is estimated typically using a 4" thickness of surfacing directly over the subgrade above the pipe.

The transition area between the mainline inslope and the approach inslope for entrances will be rounded to eliminate an abrupt transition.

The turning radii will be 35' for intersecting roads and entrances unless stated otherwise in the plans.

September 14, 2018

| | | | |
|---|---|---|---|
| Published Date: 2nd Qtr. 2019 | SDDOT | INTERSECTING ROADS AND ENTRANCES | PLATE NUMBER 120.01 |
| | | | Sheet 1 of 2 |

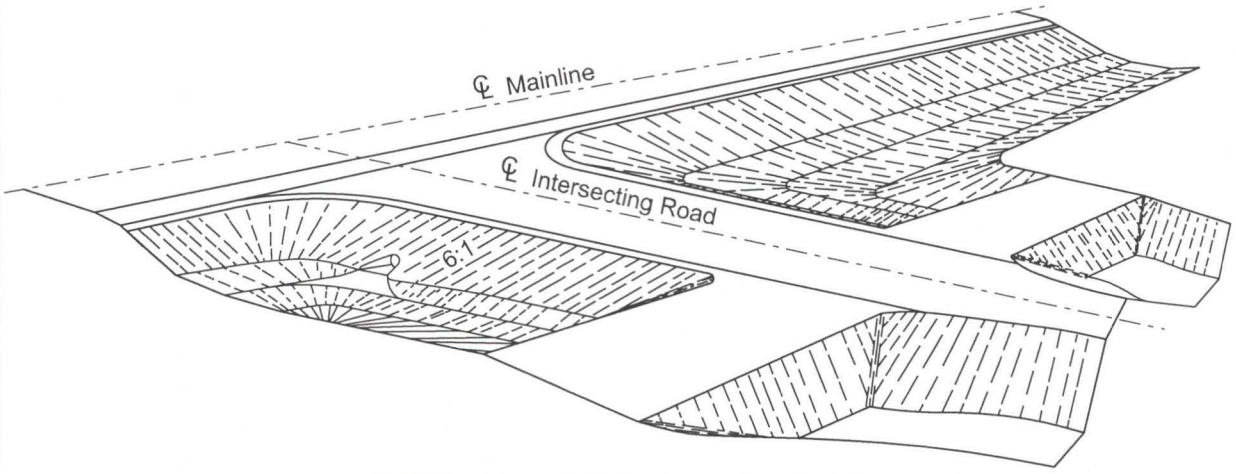


## PERSPECTIVE OF INTERSECTING ROAD

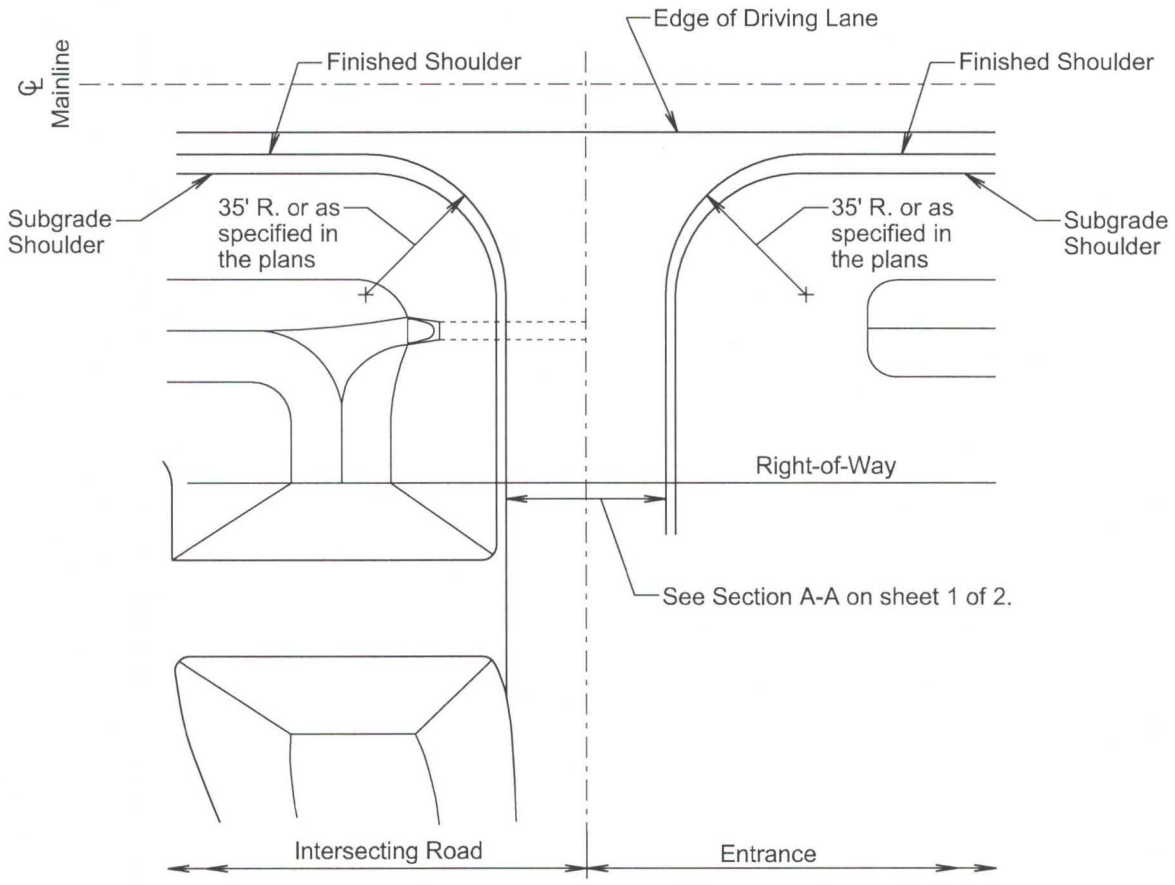


## PLAN VIEW

September 14, 2018

| | | | |
|---|---|---|---|
| Published Date: 2nd Qtr. 2019 | SDDOT | INTERSECTING ROADS AND ENTRANCES | PLATE NUMBER 120.01<br>Sheet 2 of 2 |

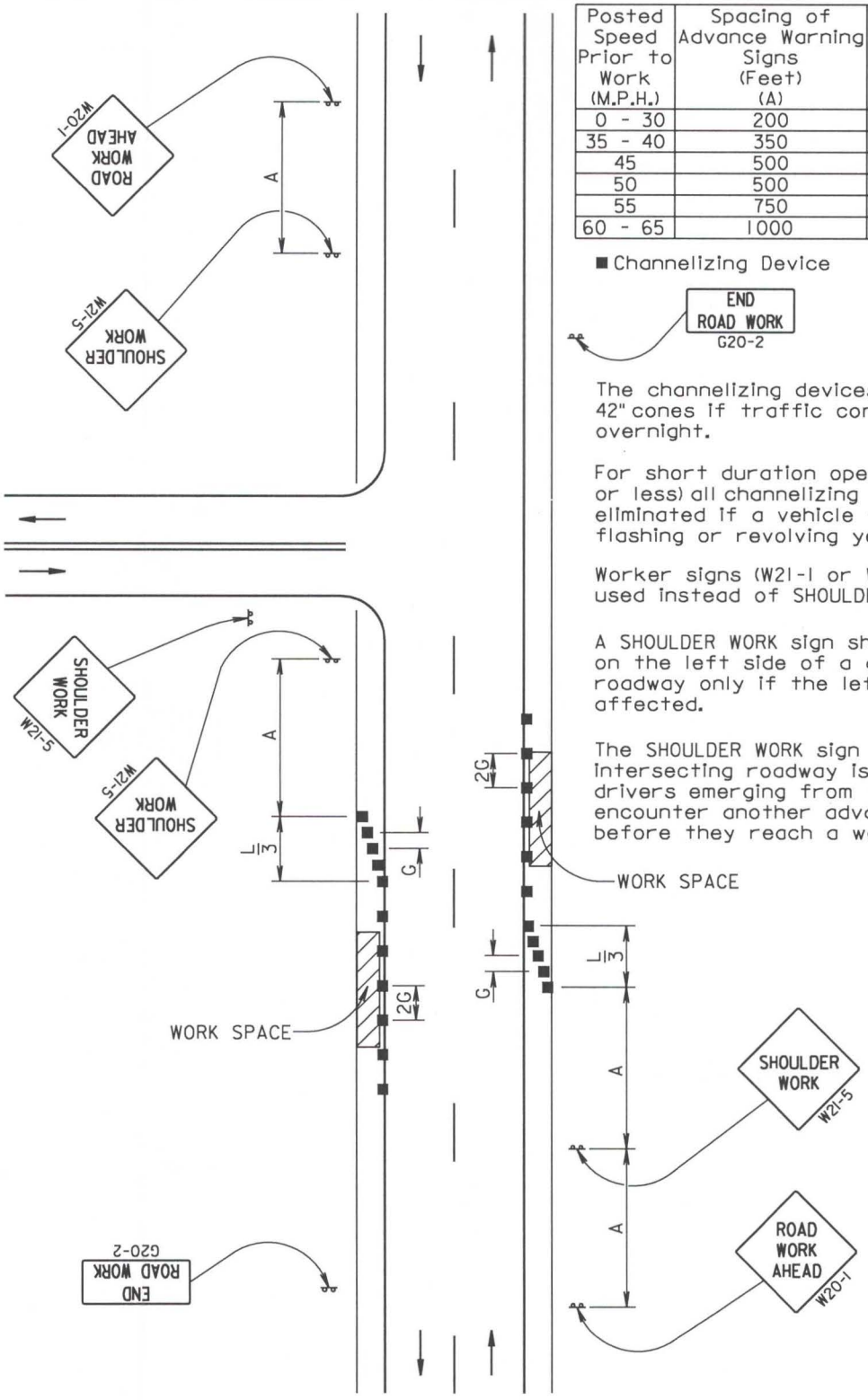


| Posted Speed Prior to Work (M.P.H.) | Spacing of Advance Warning Signs (Feet) (A) | Taper Length (Feet) (L) | Spacing of Channelizing Devices (Feet) (G) |
|---|---|---|---|
| 0 - 30 | 200 | 180 | 25 |
| 35 - 40 | 350 | 320 | 25 |
| 45 | 500 | 600 | 25 |
| 50 | 500 | 600 | 50 |
| 55 | 750 | 660 | 50 |
| 60 - 65 | 1000 | 780 | 50 |

■ Channelizing Device

END ROAD WORK
G20-2

The channelizing devices shall be drums or 42" cones if traffic control must remain overnight.

For short duration operations (1 hour or less) all channelizing devices may be eliminated if a vehicle with an activated flashing or revolving yellow light is used.

Worker signs (W21-1 or W21-1a) may be used instead of SHOULDER WORK signs.

A SHOULDER WORK sign should be placed on the left side of a divided or one-way roadway only if the left shoulder is affected.

The SHOULDER WORK sign on an intersecting roadway is not required if drivers emerging from that roadway will encounter another advance warning sign before they reach a work activity area.

June 3, 2016

| | | | |
|---|---|---|---|
| Published Date: 2nd Qtr. 2019 | SDDOT | GUIDES FOR TRAFFIC CONTROL DEVICES WORK ON SHOULDERS | PLATE NUMBER 634.03 |
| | | | Sheet 1 of 1 |

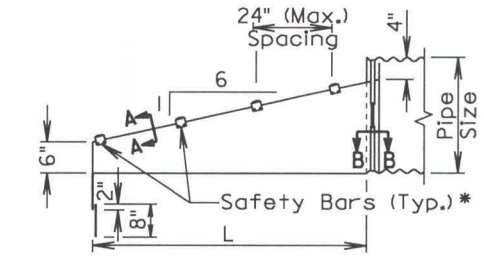


ELEVATION VIEW

*Number of bars required will vary depending on the length of the end section.

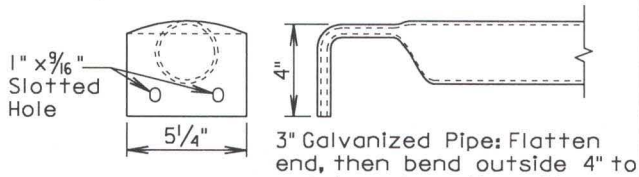


3" Galvanized Pipe: Flatten end, then bend outside 4" to match end section sides.

DETAIL OF SAFETY BARS

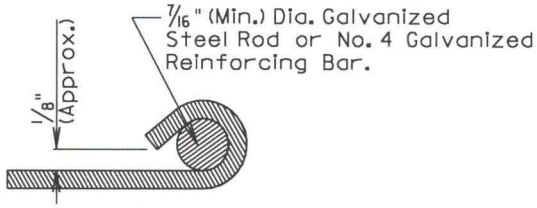


SECTION A-A

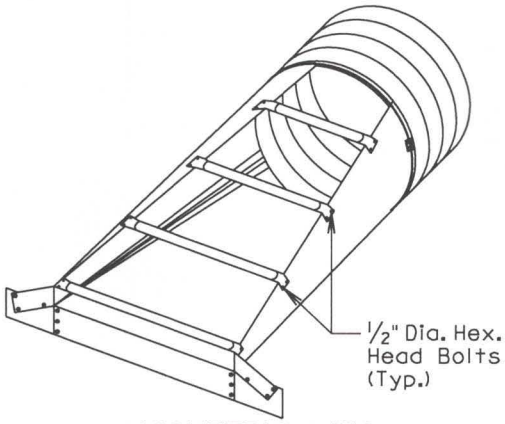


ISOMETRIC VIEW

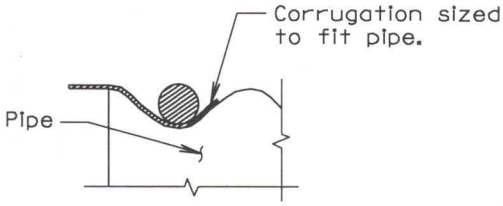


SECTION B-B

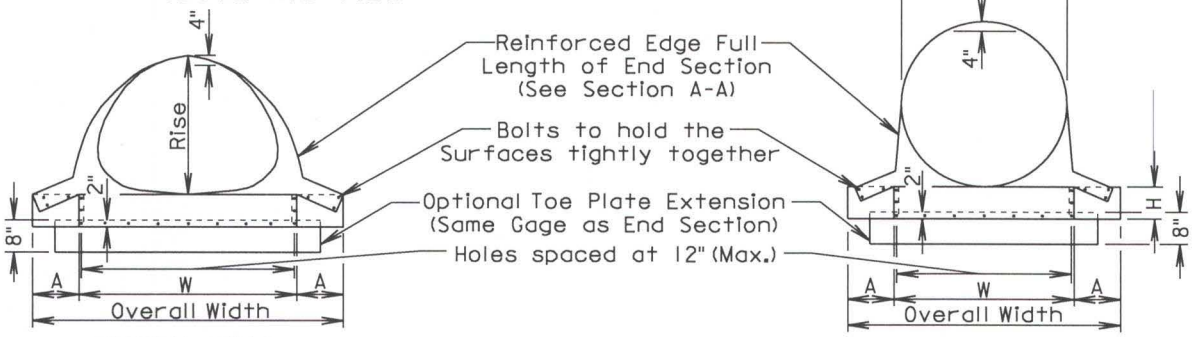


FRONT VIEW

FRONT VIEW

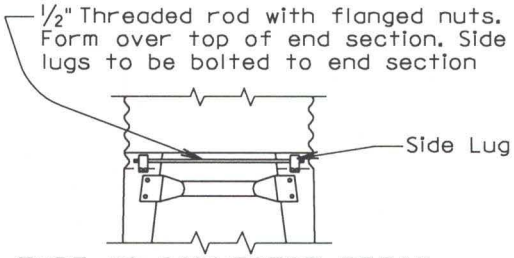


TYPE #2 CONNECTOR DETAIL
(For 30" and Larger)
(For 21" X 15" and Larger)

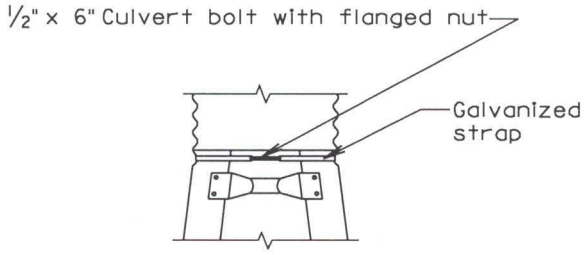


TYPE #1 CONNECTOR DETAIL
(For 15" Through 24")

June 26, 2015

| | | | |
|---|---|---|---|
| Published Date: 2nd Qtr. 2019 | SDDOT | C. M. P. SAFETY ENDS | PLATE NUMBER 450.38 |
| | | | Sheet 1 of 2 |

| ARCH C.M.P. SAFETY ENDS | | | | | | | | | | |
|---|---|---|---|---|---|---|---|---|---|---|
| Equv. Dia. (Inch) | (Inches) | | Min. Thick. | | Dimensions (Inches) | | | | L Dimensions | |
| | Span | Rise | Inch | Gage | A | H | W | Overall Width | Slope | Length (Inch) |
| 18 | 21 | 15 | .064 | 16 | 8 | 6 | 27 | 43 | 6:1 | 30 |
| 21 | 24 | 18 | .064 | 16 | 8 | 6 | 30 | 46 | 6:1 | 48 |
| 24 | 28 | 20 | .064 | 16 | 8 | 6 | 34 | 50 | 6:1 | 60 |
| 30 | 35 | 24 | .079 | 14 | 12 | 9 | 41 | 65 | 6:1 | 84 |
| 36 | 42 | 29 | .109 | 12 | 12 | 9 | 48 | 72 | 6:1 | 114 |
| 42 | 49 | 33 | .109 | 12 | 16 | 12 | 55 | 87 | 6:1 | 138 |
| 48 | 57 | 38 | .109 | 12 | 16 | 12 | 63 | 95 | 6:1 | 168 |
| 54 | 64 | 43 | .109 | 12 | 16 | 12 | 70 | 102 | 6:1 | 198 |
| 60 | 71 | 47 | .109 | 12 | 16 | 12 | 77 | 109 | 6:1 | 222 |
| 72 | 83 | 57 | .109 | 12 | 16 | 12 | 89 | 121 | 6:1 | 282 |

| CIRCULAR C.M.P. SAFETY ENDS | | | | | | | | |
|---|---|---|---|---|---|---|---|---|
| Pipe Dia. (Inch) | Min. Thick. | | Dimensions (Inches) | | | | L Dimensions | |
| | Inch | Gage | A | H | W | Overall Width | Slope | Length (Inch) |
| 15 | .064 | 16 | 8 | 6 | 21 | 37 | 6:1 | 30 |
| 18 | .064 | 16 | 8 | 6 | 24 | 40 | 6:1 | 48 |
| 21 | .064 | 16 | 8 | 6 | 27 | 43 | 6:1 | 66 |
| 24 | .064 | 16 | 8 | 6 | 30 | 46 | 6:1 | 84 |
| 30 | .109 | 12 | 12 | 9 | 36 | 60 | 6:1 | 120 |
| 36 | .109 | 12 | 12 | 9 | 42 | 66 | 6:1 | 156 |
| 42 | .109 | 12 | 16 | 12 | 48 | 80 | 6:1 | 192 |
| 48 | .109 | 12 | 16 | 12 | 54 | 86 | 6:1 | 228 |
| 54 | .109 | 12 | 16 | 12 | 60 | 92 | 6:1 | 264 |
| 60 | .109 | 12 | 16 | 12 | 66 | 98 | 6:1 | 300 |

GENERAL NOTES:

Safety ends shall be fabricated from galvanized steel conforming to the requirements of the Specifications.

Safety bars shall be fabricated from steel schedule 40 pipe in conformance with ASTM A53, grade B or HSS 3.5X.216 in conformance with ASTM A500, grade B.

Slotted holes for safety bar attachment shall be provided for all end sections.

Attachment to circular pipes 15" through 24" diameter shall be made with Type #1 straps. All other sizes shall be attached with Type #2 rods and lugs.

When stated in the plans, optional toe plate extension shall be punched and bolted to end section apron lip with 3/8" diameter galvanized bolts. Steel for toe plate extension shall be same gauge as end section. Dimensions shall be overall width less 6" by 8" high.

Installation shall be performed in accordance with the Specifications.

Cost of all work and materials required for fabrication and installation of safety ends shall be incidental to the bid items for the various sizes of safety ends.

*June 26, 2015*

| | | | |
|---|---|---|---|
| **Published Date: 2nd Qtr. 2019** | SDDOT | **C. M. P. SAFETY ENDS** | PLATE NUMBER 450.38 |
| | | | Sheet 2 of 2 |

DOT-166

T-1D

# Application for Highway Access Permit
# South Dakota Department of Transportation

**Permit Application (to be completed by applicant).**

**Instructions:** Please contact the local South Dakota Department of Transportation office to determine what supporting documents must accompany this application. Please submit a separate application and supporting documentation for each access requested. Attach additional sheets as necessary. Please print or type. Owner and applicant agree to comply with special and standard conditions if access permitted.

**Property Owner:**
Name(s): Prevailing Wind Park, LLC
Mailing Address: 2180 S 1300 E ste 600
City, State, Zip: Salt Lake City, UT 84106
Daytime Phone: 325-207-9064

**Applicant (if different from Owner):**
Name(s):
Mailing Address:
City, State, Zip
Daytime Phone:

**Property to be Served by Approach:**
County: Bon Homme
Section: 4 Township: Avon
Range: 61-W
Or
Subdivision: _____ Block/Lot: _____
Street Address:
City:

**State Highway to be Accessed by Approach:**
State Highway Number: 46
Access would be 2140 feet (north, south, east or west) from 407TH AVE (nearest cross street).

**Land Use of Property to be Served (check one):**
- ☐ Agricultural: acres served _____
- ☐ Business: type _____ total square footage of buildings: ____ number of employees _____
- ☐ Residential: number of single-family dwellings _____, or number of multi-family dwellings _____.
- ☑ Other: describe Wind Turbine Access

**Type of Permit Requested (check one)**
- ☑ New approach
- ☐ Change in use
- ☐ Temporary access
- ☐ Improve existing access
- ☐ Relocate existing access
- ☐ Remove existing access

**Requested Approach Width (check one)**
24' ☑ 30' ☐ 36' ☐ 40' ☐

**Local Government Reviews:**

**County:** _____
Comments:
Concurrence signature: _____ Date: _____

**Municipality:** _____
Comments:
Concurrence signature: _____ Date: _____

**Estimated Date of Construction:** June, 2019

I, the undersigned, request permission to construct or modify an access approach subject to the rules and regulations set forth in SDCL 70:09.

**Signature of Applicant:** [signature] **Date:** 5/17/19

**Signature of Owner (if different than applicant):** [signature] **Date:** 5/17/19

**Permit Decision (to be completed by SDDOT).**

**Supporting Materials Required:**

| (Required) | | (Received) |
|---|---|---|
| ☐ | Access Approach Design | ☐ |
| ☐ | Vicinity Map | ☐ |
| ☐ | Traffic Volumes | ☐ |
| ☐ | Three Copies of Site Plan | ☐ |
| ☐ | Traffic Control Plan | ☐ |
| ☐ | Proof of Liability Insurance | ☐ |
| ☐ | Detailed Development Plan | ☐ |
| ☐ | Drainage Plan | ☐ |
| ☐ | Traffic Impact Study | ☐ |
| ☐ | Revegetation Plan | ☐ |
| ☐ | Other _____ | ☐ |

**Received by SDDOT:** Date: 05/17/19

**Decision: (to be made after Application Review)**
- ☒ Access Approved
- ☐ Access Approved with Variance: _____
- ☐ Access Denied

**Terms and Conditions of Approval (or Reason for Denial)**

**Access Must be Constructed By:** 5/17/20

**SDDOT Area Engineer Signature:** [signature]
Date: 05/28/19

**SDDOT Area:**
Area Office: Yankton
Contact Person: Rod Gall
Contact Phone: 605-668-2929
Permit Number: YA-2019-4

Distribution: Original – Owner; Copies – Access Management, Area Office

DOT-166

## SDDOT Highway Access Permit Application Review Sheet (to be completed by SDDOT)

**Highway Access Classification: (check one)**

- [ ] Expressway
- [ ] Free Flow Urban
- [ ] Intermediate Urban
- [ ] Urban Developed
- [ ] Urban Fringe
- [x] Rural

**Highway** 46
**MRM + Displacement** 301 + 169
**Left** ☐ **Right** ☒
**Average Daily Traffic** 778
**Accidents (three years)** 1.41

**Highway Alignment to Left of Access** (as seen when standing on access)

- [x] Straight
- [ ] Turns left
- [ ] Turns right

Stopping Sight Distance: 1200 ft.
Entering Sight Distance: 1200 ft.
Posted Speed Limit: 65 mph

- [x] Flat
- [ ] Slopes up
- [ ] Slopes down

- [x] 0-3% grade
- [ ] 3-5% grade
- [ ] >5% grade

**Highway Alignment to Right of Access** (as seen when standing on access)

- [x] Straight
- [ ] Turns left
- [ ] Turns right

Stopping Sight Distance: 1200 ft.
Entering Sight Distance: 1200 ft.
Posted Speed Limit 65 mph

- [x] Flat
- [ ] Slopes up
- [ ] Slopes down

- [x] 0-3% grade
- [ ] 3-5 % grade
- [ ] >5% grade

**Significant Design and Potential Impact Considerations (check all that apply and explain checked items):**

- [ ] Sidewalks or Bike Paths
- [ ] Curb & Gutter
- [ ] On-Street Parking
- [ ] Shoulder Width
- [ ] Historical Resources
- [ ] Surface Drainage
- [ ] Drainage Structures
- [ ] Major Structures
- [ ] Guard Rail
- [ ] Above-Ground Utilities
- [ ] Railroad Tracks
- [ ] Distance to Nearby Streets, Both Directions
- [ ] Distance to Nearby Driveways, Both Directions
- [ ] Others Streets with Access or Available Access
- [ ] Traffic Control Devices or Relocation Needed
- [ ] Median Crossovers

Explain impact on design: Approach shall be constructed as shown in standard plates (Attached) signs must be placed as shown when constructing approach. All cmp & safety will be purchased by the owner.

**SDDOT Region Traffic Engineer Review (optional):**
Comments:

Signature: _____ date: __/__/__

**SDDOT Access Management Review (optional):**
Comments:

Signature: _____ date: __/__/__

**APPROACH DESIGN SKETCH**

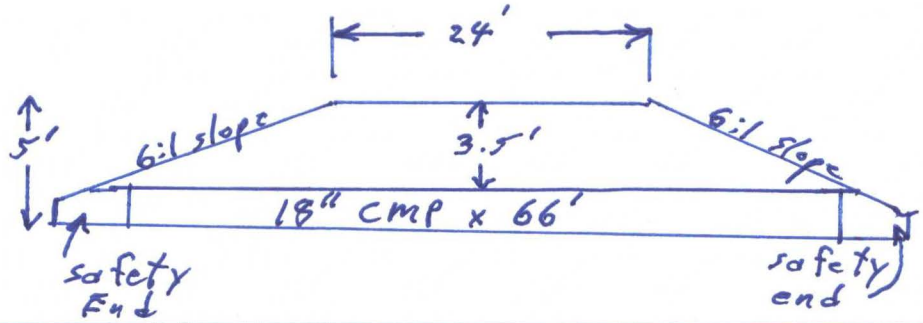


**List Attachments:**

- [x] Driveway details
- [x] Culvert details
- [ ] Mailbox details
- [ ] Fencing details
- [ ] Cattle guard
- [ ] Sidewalk details
- [ ] Median crossovers
- [ ] Recreation paths
- [ ] Rail crossings
- [ ] Auxiliary lanes
- [ ] Storm sewer
- [ ] Pavement
- [ ] Curb & gutter
- [x] Traffic Control
- [ ] Sign/signal/marking
- [ ] Other

**SDDOT Review Performed by:** Rod Goll **Date:** 5/28/19


Untitled Map
Write a description for your map.
Legend
New 24'
Approach
↓
46
407th Ave
Google Earth
© 2018 Google
N
1000 ft

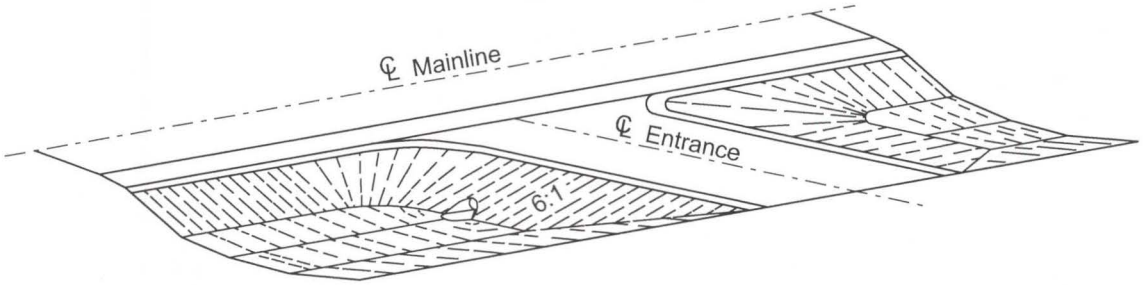


## PERSPECTIVE OF ENTRANCE

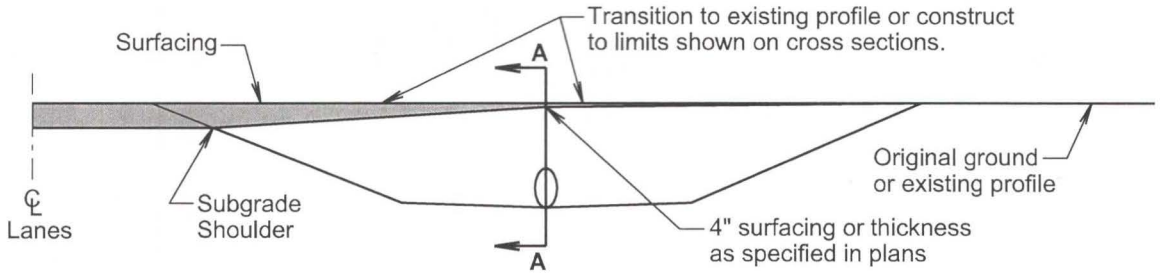


## ELEVATION VIEW
(Entrance)

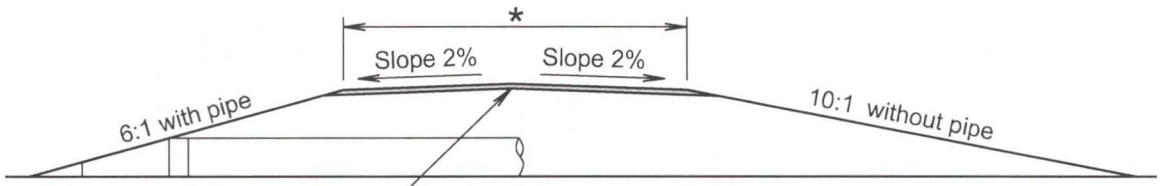


4" surfacing or thickness as specified in plans

## SECTION A-A
(Entrance)

* The finished surfacing width is stated elsewhere in the plans. The subgrade width is 4' wider than the finished surfacing width unless stated otherwise in the plans.

**GENERAL NOTES:**

The ditch section shown above in the perspective and elevation view is only for illustrative purpose.

A 6:1 inslope will be constructed for an entrance when a pipe is required. A 10:1 inslope will be constructed when a pipe is not required.

Pipe length will be adjusted if necessary during construction to obtain the 6:1 slope. For grading projects, the pipe length is estimated typically using a 4" thickness of surfacing directly over the subgrade above the pipe.

The transition area between the mainline inslope and the approach inslope for entrances will be rounded to eliminate an abrupt transition.

The turning radii will be 35' for intersecting roads and entrances unless stated otherwise in the plans.

September 14, 2018

| | | | |
|---|---|---|---|
| Published Date: 2nd Qtr. 2019 | SDDOT | INTERSECTING ROADS AND ENTRANCES | PLATE NUMBER 120.01 |
| | | | Sheet 1 of 2 |

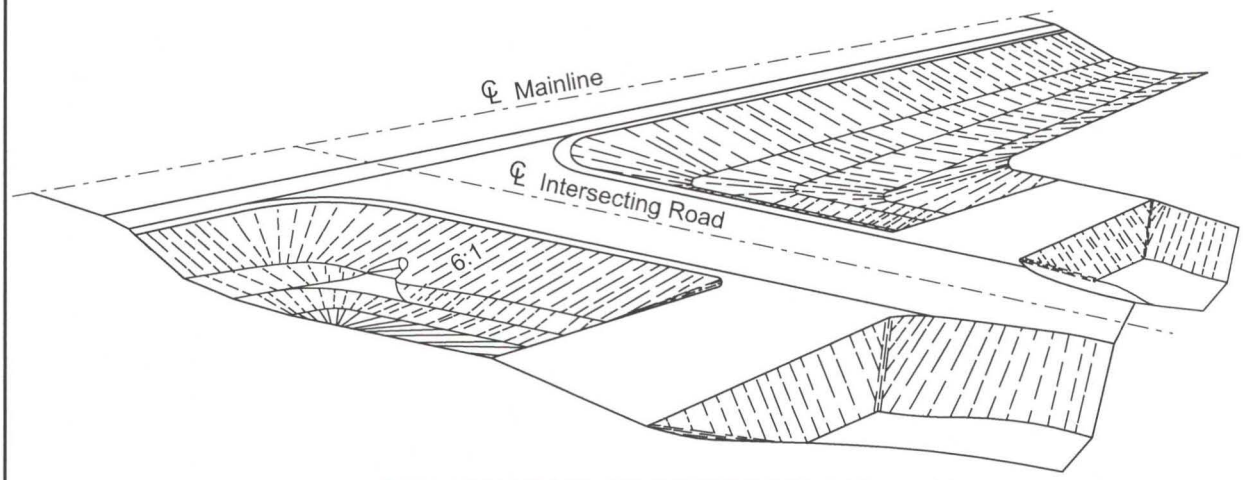


## PERSPECTIVE OF INTERSECTING ROAD

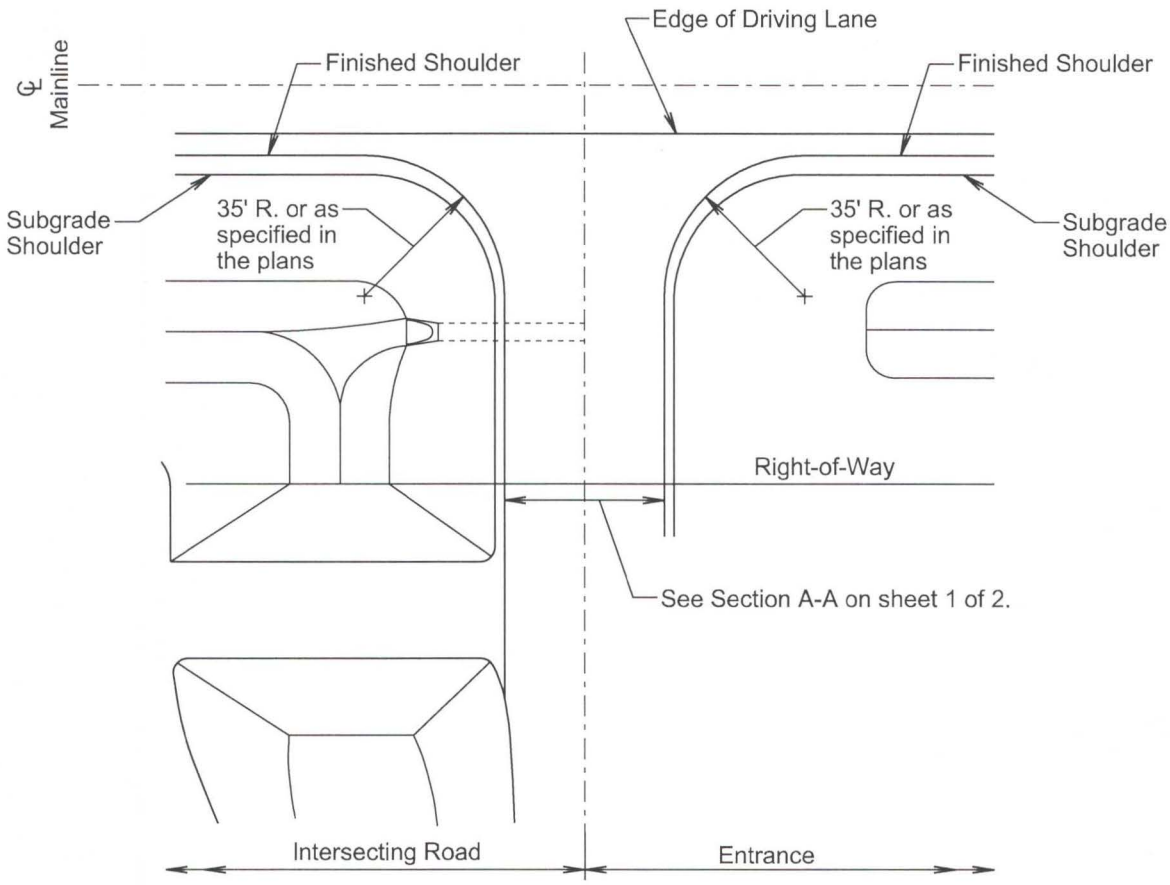


## PLAN VIEW

September 14, 2018

| | | | |
|---|---|---|---|
| Published Date: 2nd Qtr. 2019 | SDDOT | INTERSECTING ROADS AND ENTRANCES | PLATE NUMBER 120.01<br>Sheet 2 of 2 |

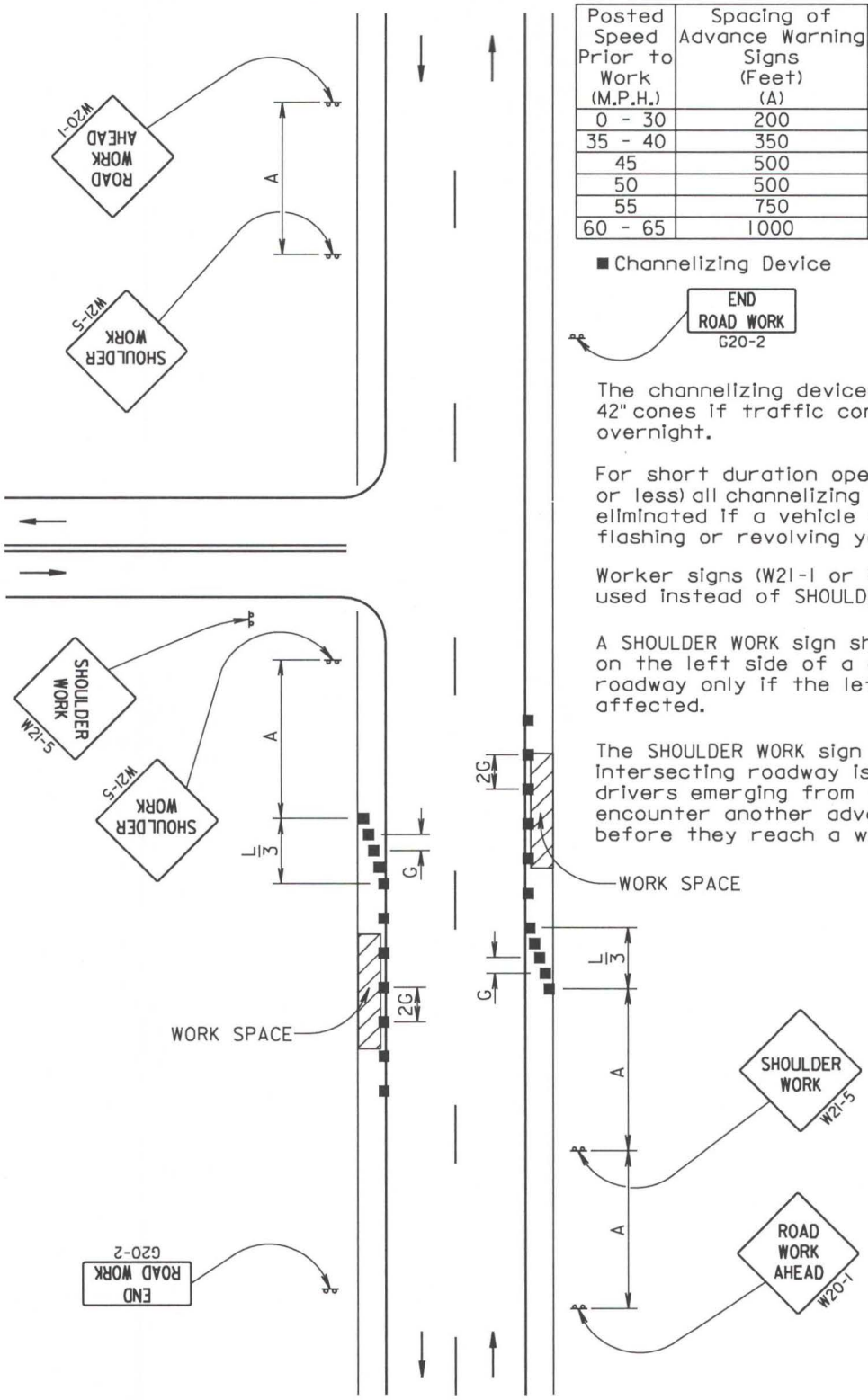


| Posted Speed Prior to Work (M.P.H.) | Spacing of Advance Warning Signs (Feet) (A) | Taper Length (Feet) (L) | Spacing of Channelizing Devices (Feet) (G) |
|---|---|---|---|
| 0 - 30 | 200 | 180 | 25 |
| 35 - 40 | 350 | 320 | 25 |
| 45 | 500 | 600 | 25 |
| 50 | 500 | 600 | 50 |
| 55 | 750 | 660 | 50 |
| 60 - 65 | 1000 | 780 | 50 |

■ Channelizing Device

END ROAD WORK
G20-2

The channelizing devices shall be drums or 42" cones if traffic control must remain overnight.

For short duration operations (1 hour or less) all channelizing devices may be eliminated if a vehicle with an activated flashing or revolving yellow light is used.

Worker signs (W21-1 or W21-1a) may be used instead of SHOULDER WORK signs.

A SHOULDER WORK sign should be placed on the left side of a divided or one-way roadway only if the left shoulder is affected.

The SHOULDER WORK sign on an intersecting roadway is not required if drivers emerging from that roadway will encounter another advance warning sign before they reach a work activity area.

June 3, 2016

| | | | |
|---|---|---|---|
| Published Date: 2nd Qtr. 2019 | SDDOT | GUIDES FOR TRAFFIC CONTROL DEVICES WORK ON SHOULDERS | PLATE NUMBER 634.03 |
| | | | Sheet 1 of 1 |

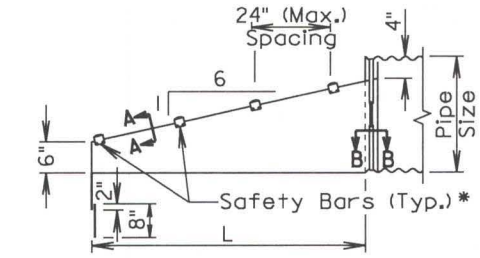


ELEVATION VIEW

*Number of bars required will vary depending on the length of the end section.

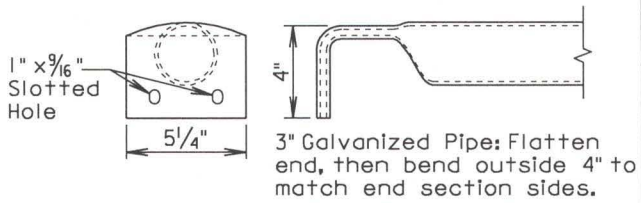


DETAIL OF SAFETY BARS

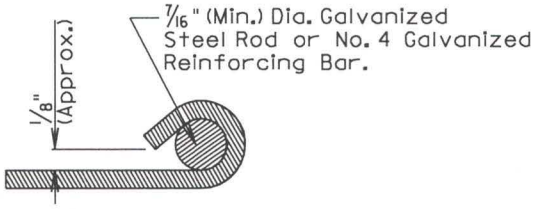


SECTION A-A

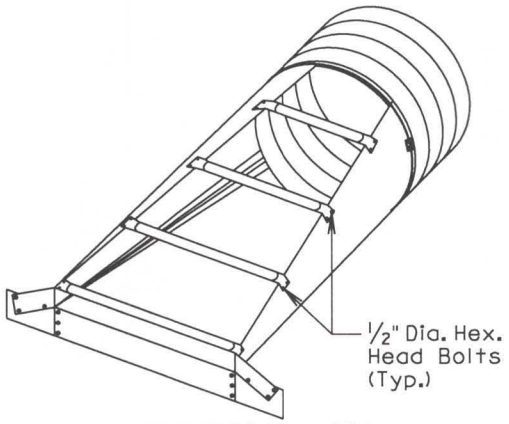


ISOMETRIC VIEW

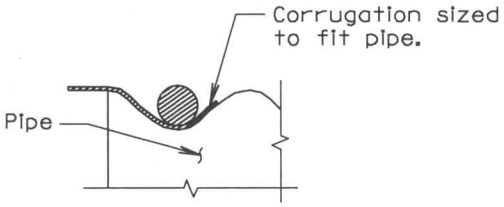


SECTION B-B

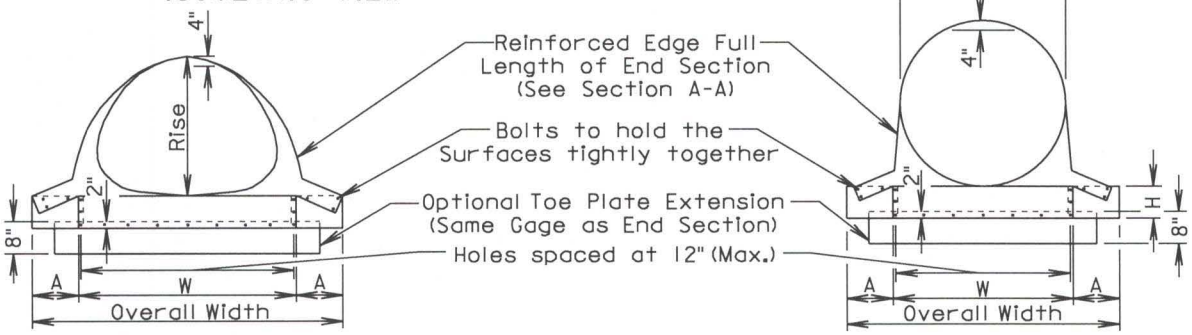


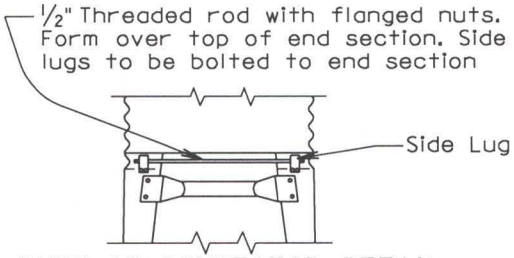


TYPE #2 CONNECTOR DETAIL
(For 30" and Larger)
(For 21" X 15" and Larger)

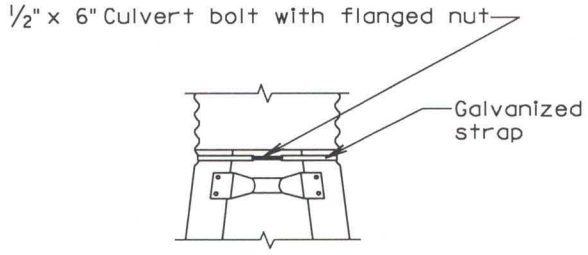


TYPE #1 CONNECTOR DETAIL
(For 15" Through 24")

June 26, 2015

| | | | |
|---|---|---|---|
| Published Date: 2nd Qtr. 2019 | SDDOT | C. M. P. SAFETY ENDS | PLATE NUMBER 450.38 |
| | | | Sheet 1 of 2 |

| ARCH C.M.P. SAFETY ENDS | | | | | | | | | | |
|---|---|---|---|---|---|---|---|---|---|---|
| Equv. Dia. (Inch) | (Inches) | | Min. Thick. | | Dimensions (Inches) | | | | L Dimensions | |
| | Span | Rise | Inch | Gage | A | H | W | Overall Width | Slope | Length (Inch) |
| 18 | 21 | 15 | .064 | 16 | 8 | 6 | 27 | 43 | 6:1 | 30 |
| 21 | 24 | 18 | .064 | 16 | 8 | 6 | 30 | 46 | 6:1 | 48 |
| 24 | 28 | 20 | .064 | 16 | 8 | 6 | 34 | 50 | 6:1 | 60 |
| 30 | 35 | 24 | .079 | 14 | 12 | 9 | 41 | 65 | 6:1 | 84 |
| 36 | 42 | 29 | .109 | 12 | 12 | 9 | 48 | 72 | 6:1 | 114 |
| 42 | 49 | 33 | .109 | 12 | 16 | 12 | 55 | 87 | 6:1 | 138 |
| 48 | 57 | 38 | .109 | 12 | 16 | 12 | 63 | 95 | 6:1 | 168 |
| 54 | 64 | 43 | .109 | 12 | 16 | 12 | 70 | 102 | 6:1 | 198 |
| 60 | 71 | 47 | .109 | 12 | 16 | 12 | 77 | 109 | 6:1 | 222 |
| 72 | 83 | 57 | .109 | 12 | 16 | 12 | 89 | 121 | 6:1 | 282 |

| CIRCULAR C.M.P. SAFETY ENDS | | | | | | | | |
|---|---|---|---|---|---|---|---|---|
| Pipe Dia. (Inch) | Min. Thick. | | Dimensions (Inches) | | | | L Dimensions | |
| | Inch | Gage | A | H | W | Overall Width | Slope | Length (Inch) |
| 15 | .064 | 16 | 8 | 6 | 21 | 37 | 6:1 | 30 |
| 18 | .064 | 16 | 8 | 6 | 24 | 40 | 6:1 | 48 |
| 21 | .064 | 16 | 8 | 6 | 27 | 43 | 6:1 | 66 |
| 24 | .064 | 16 | 8 | 6 | 30 | 46 | 6:1 | 84 |
| 30 | .109 | 12 | 12 | 9 | 36 | 60 | 6:1 | 120 |
| 36 | .109 | 12 | 12 | 9 | 42 | 66 | 6:1 | 156 |
| 42 | .109 | 12 | 16 | 12 | 48 | 80 | 6:1 | 192 |
| 48 | .109 | 12 | 16 | 12 | 54 | 86 | 6:1 | 228 |
| 54 | .109 | 12 | 16 | 12 | 60 | 92 | 6:1 | 264 |
| 60 | .109 | 12 | 16 | 12 | 66 | 98 | 6:1 | 300 |

GENERAL NOTES:

Safety ends shall be fabricated from galvanized steel conforming to the requirements of the Specifications.

Safety bars shall be fabricated from steel schedule 40 pipe in conformance with ASTM A53, grade B or HSS 3.5X.216 in conformance with ASTM A500, grade B.

Slotted holes for safety bar attachment shall be provided for all end sections.

Attachment to circular pipes 15" through 24" diameter shall be made with Type #1 straps. All other sizes shall be attached with Type #2 rods and lugs.

When stated in the plans, optional toe plate extension shall be punched and bolted to end section apron lip with 3/8" diameter galvanized bolts. Steel for toe plate extension shall be same gauge as end section. Dimensions shall be overall width less 6" by 8" high.

Installation shall be performed in accordance with the Specifications.

Cost of all work and materials required for fabrication and installation of safety ends shall be incidental to the bid items for the various sizes of safety ends.

June 26, 2015

| | | | |
|---|---|---|---|
| Published Date: 2nd Qtr. 2019 | SDDOT | C. M. P. SAFETY ENDS | PLATE NUMBER 450.38 |
| | | | Sheet 2 of 2 |