NO. D40054
SHEET 2

MK	QTY	SIZE	NOZZLE	TYPE
N1	1	8"	INLET	600# RFLWN
N2	1	8"	OUTLET	600# RFLWN
N3	1	2"	BLOWDOWN	600# RFWN
N4	2	3/4"	VENT	6000# NPT
N5	1	3/4"	DRAIN	6000# NPT
N6	2	3/4"	SUMP DRAIN	6000# NPT
N7	2	1/4"	PRESS. GA.	6000# NPT
N8	2	2"	HEATER	6000# NPT
N10	2	3/4"	LEVEL GA.	6000# NPT

NO.	REVISION	DATE	BY/PAR
1	REVISED "AS BUILT"	08JUL10	CH

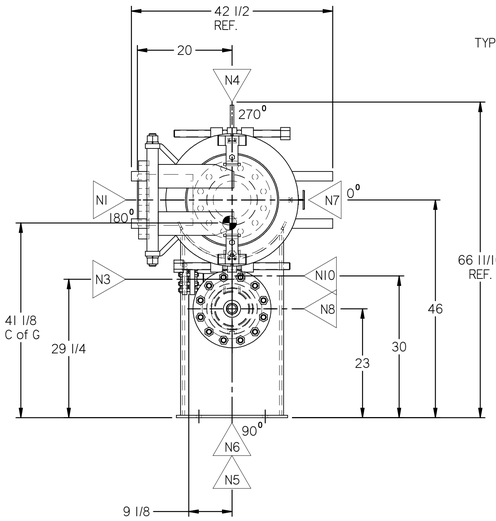

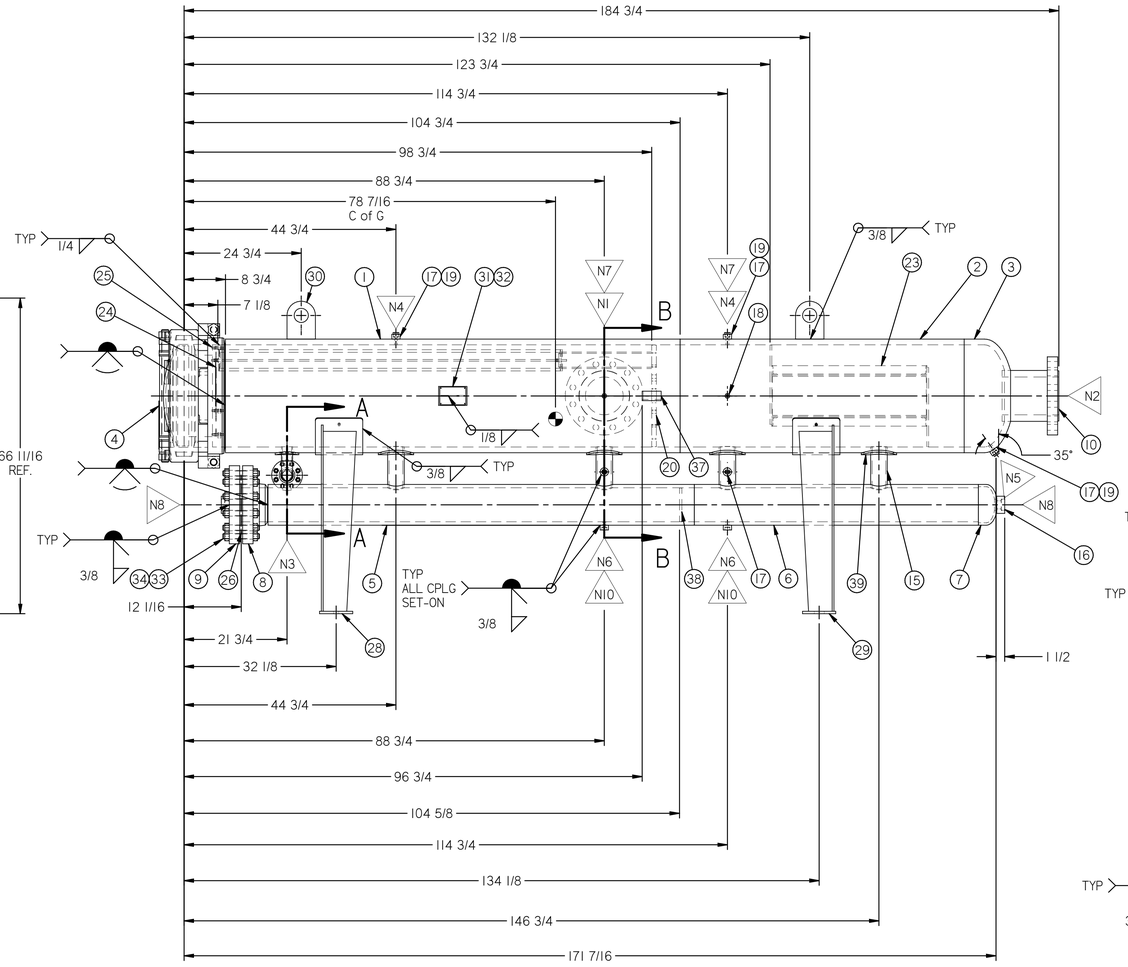

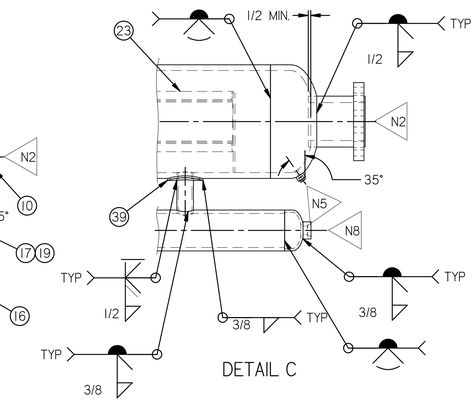

DETAIL C

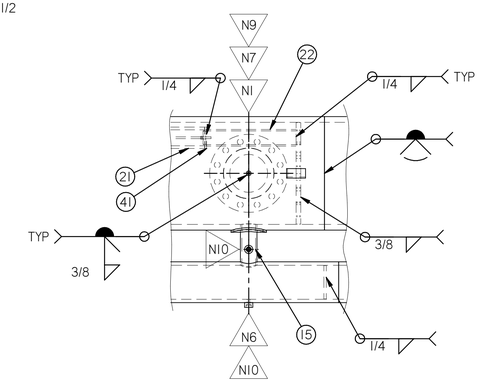

DETAIL D

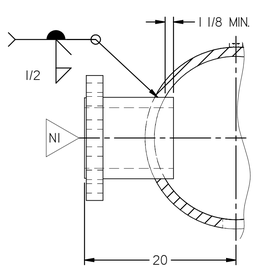

SECTION B-B
INLET NOZZLE DETAIL

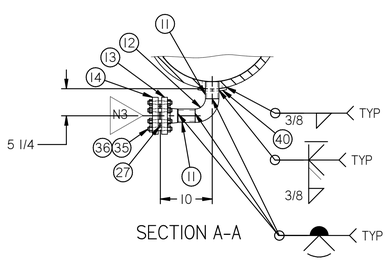

SECTION A-A

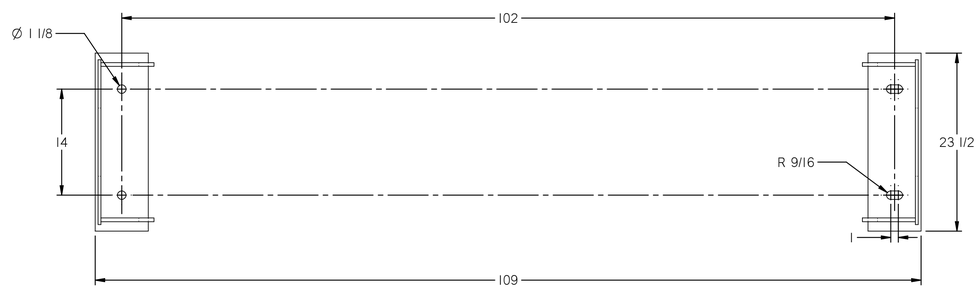

FOOT PLATE LAYOUT

NOTE:
1. ALL DIMENSIONS ARE IN INCHES UNLESS OTHERWISE SPECIFIED.
2. NOZZLE FLANGE BOLT HOLES SHALL STRADDLE FILTER CENTERLINE.
3. STAMP INLET AND OUTLET ON RESPECTIVE NOZZLES.
4 FOR WELDING USE WELDING PROCEDURE WP#5 AND WP#16.
INTERNAL: CLEAN & DRY
EXTERNAL: TSK7599
5. VESSEL IS DESIGNED TO ACCOMMODATE 4 1/2" OD X 72"LG COALESCER FILTER ELEMENTS, QTY=12
6. QTY: 1

DESIGN DATA	
CODE:	ASME SECT. VIII 2007ED 2008AD
CODE STAMP:	"U" STAMP
MODEL:	QFSH2472C1440-001
INTERNAL DESIGN PRESS.:	1440 PSIG
INTERNAL DESIGN TEMP.:	100 F
MDMT:	-20 F
MAWP:	1440 PSIG
EXTERNAL DESIGN PRESS.:	-
EXTERNAL DESIGN TEMP.:	-
CORROSION ALLOWANCE:	0.0625"
TEST PRESS.:	1872 PSIG
IMPACT TEST:	EXEMPT UCS-66(f) & UG-20(f)
PWHT:	NONE
PRODUCT:	NATURAL GAS
FLOWRATE:	34000 SCFM (48.9 MMSCFD)
VESSEL DRY WEIGHT:	7325 LBS.
FULL H20 WEIGHT:	9475 LBS.
VESSEL VOLUME:	33.5CUFT
NDE	
RADIOGRAPHY:	RT-2
	CIRC. SEAMS ON 24" SHELL

AS BUILT
JULY-08-2010
W042649

DET	DESCRIPTION	MATERIAL MATERIEL	PART NO. NO.PIECE	QTY QTE.
41	STOOL PLATE 3/4"THK X 4 1/2"OD	SA-479-316 /316L	A49043	12
40	REINFORCEMENT PAD 3/8"THK X 5"OD	SA-516-70	A40054-11	1
39	REINFORCEMENT PAD 3/8"THK X 7 1/2"OD	SA-516-70	A40054-07	4
38	PLATE 1/2"THK X 7"OD	SA-516-70	A15372-06-059	1
37	ANGLE 1/4"THK X 2" X 2" X 4"LG	SA-36/44W	A11413-05	1
36	NUT 5/8"-11UNC	SA-194-2H	B11609-02	16
35	STUD 5/8"-11UNC X 4 1/2"LG	SA-193-B7	B11627-28	8
34	NUT 1 1/8"-8UN	SA-194-2H	B11609-06	24
33	STUD 1 1/8"-8UN X 8"LG	SA-193-B7	B11627-111	12
32	NAMEPLATE - ASME SECTION VIII	SS304	A17316-01	1
31	NAMEPLATE BRACKET	CS	B15585-02	1
30	LIFTING LUG 7/8"THK X 6" X 8"LG	SA-516-70	A49046-01	2
29	SADDLE ASSEMBLY	CS	B49054-09	1
28	SADDLE ASSEMBLY	CS	B49054-08	1
27	GASKET 2"-600# TYPE SPRWD	SS304/GRAPHITE	B10248-346	1
26	GASKET 8"-600# TYPE SPRWD	SS304/GRAPHITE	B10248-326	1
25	PRESSURE PLATE LUG ASSEMBLY	SS316	A49016-01	3
24	SPIDER PLATE 1/8"THK, SEE DETAIL	ALUMINUM	A40054-04	1
23	VANE ASSEMBLY	-	A40054-05	1
22	PIPE 3" SCH80 X19"LG	SA-106B SMLS	A11626-29	12
21	COALESCER MOUNTING ASSEMBLY	-	A49044-02	12
20	CARTRIDGE PLATE 7/8"THK X 21 7/16"OD	SA-516-70	A40054-03	1
19	3/4"NPT HEX HEAD PLUG	SA-105	A15379-05	3
18	FULL COUPLING 1/4"NPT 6000#	SA-105	B15411-327	2
17	HALF COUPLING 3/4"NPT 6000#	SA-105	B15411-221	7
16	HALF COUPLING 2"NPT 6000#	SA-105	B15411-429	2
15	PIPE 3" SCHXXS X 10"LG	SA-106B SMLS	A11632-149-003	4
14	2"-600# RFBLIND	SA-105	C10556-137	1
13	2"-600# RFWN SCHXXS BORE	SA-105	A15400-422	1
12	ELBOW 2" PIPE SCH XXS 90° LR BW	SA-234 WPB	B15411-428	1
11	PIPE 2" SCHXXS X 3 1/2"LG	SA-106B SMLS	A11632-111-001	2
10	8" RFLWN 600# X 12"LG	SA-350 LF2 CL1	A15400-420	2
9	FLANGE 8"-600# RFBLIND	SA-105	C10556-144	1
8	FLANGE 8"-600# RFWN SCH120 BORE	SA-105	A15400-421	1
7	PIPE CAP 8" SCH 120	SA-234 WPB	B15411-430	1
6	SUMP SHELL PIPE 8" SCH 120 X 60"LG	SA-106B SMLS	A11632-12-003	1
5	SUMP SHELL PIPE 8" SCH120 X 90"LG	SA-106B SMLS	A11632-12-002	1
4	24" CLASS 600H HINGED CLOSURE (SYPRIS TECHNOLOGIES INC. - TUBE TURNS DIVISION	CS	2000327339	1
3	PIPE CAP 24" SCH 80	SA-420 WPL6	B15411-426	1
2	SHELL PIPE 24" SCH80 X 60"LG	SA-333 GR.6 SMLS	A11632-217-002	1
1	SHELL PIPE 24" SCH80 X 96"LG	SA-333 GR.6 SMLS	A11632-217-001	1

BILL OF MATERIAL / LISTE DE MATERIEL

PROJECT INFO:

CUSTOMER: NOVASPECT INC.
PURCHASE ORDER NO.: H12302372
TAG NO.: PO# 121166 OP
TITLE: GAS FILTER SEPARATOR
-

NO.: D40054 SHEET 2
REV.: 1
REF.: -
S.O.: W000042849

TOLERANCE UNLESS NOTED OTHERWISE:
± ANGULAR 1° | ± DECIM. 0.005" | ± FRACT. 1/8" | ± METRIC 1mm

SCALE / ECHELLE: NTS

DRAWN BY:	CH	13JAN10
CHECKED BY:	BM	22JAN10
APPROVED BY:	BM	22JAN10
DIST:		G

CCI Thermal Technologies INC.

DIMENSIONAL TOLERANCES
UNLESS OTHERWISE SPECIFIED
-DECIMAL ± 0.015"
-FRACTIONAL ± 1/8"
-ANGLE ±1DEG.
-METRIC ± 3mm

PROPRIETARY NOTICE
THE DESIGN AND TECHNICAL INFORMATION APPEARING ON THIS DRAWING IS THE PROPERTY OF CCI THERMAL AND IS DISCLOSED IN CONFIDENCE. IT IS NOT TO BE COPIED, REPRODUCED, REVEALED TO OR APPROPRIATED BY OTHERS, EITHER IN WHOLE OR IN PART, WITHOUT PRIOR EXPRESS WRITTEN CONSENT OF CCI THERMAL TECHNOLOGIES INC.

DCS-ME-0NG-0001