CURRENT CHEYENNE SYSTEM

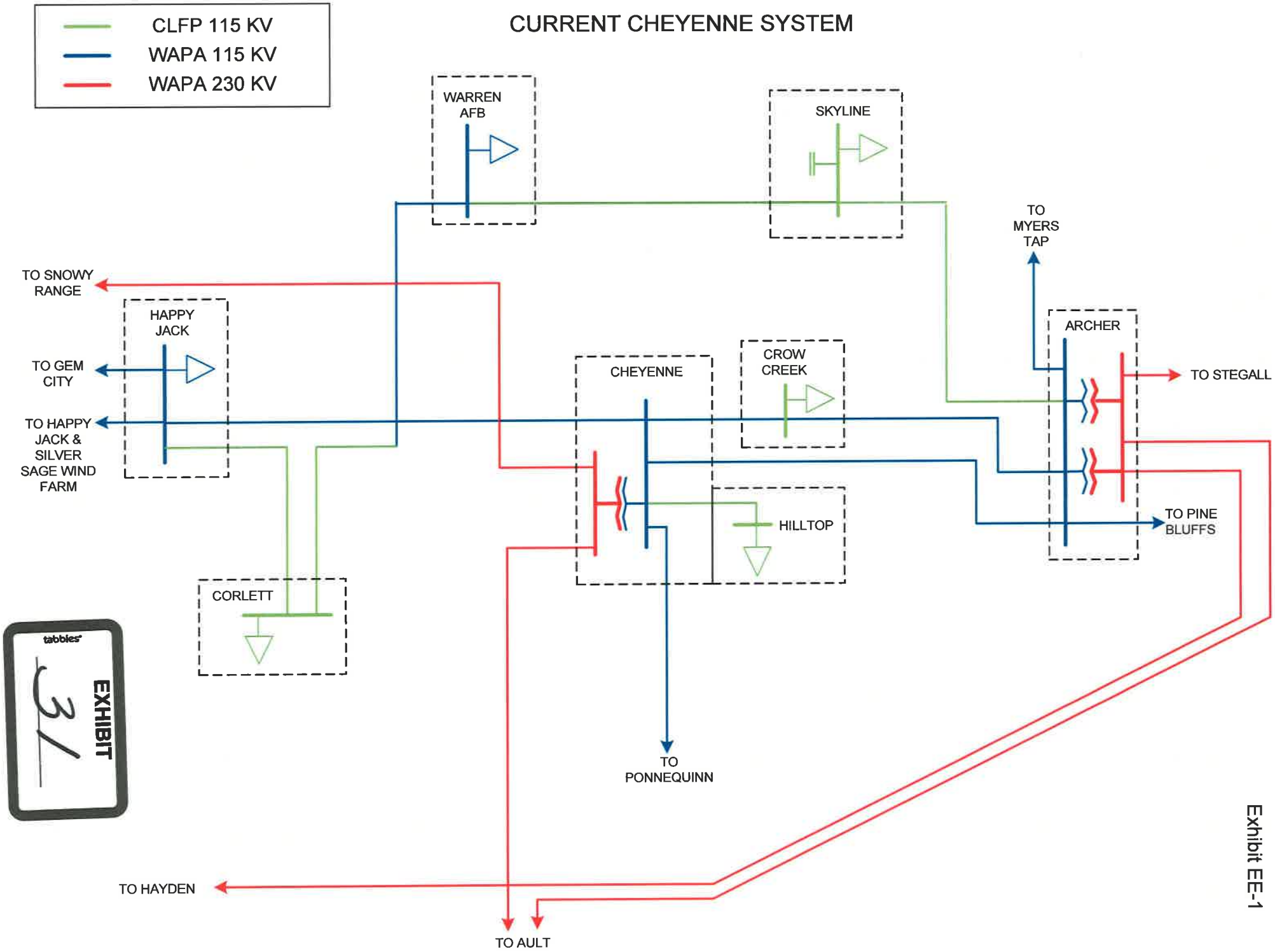

EXHIBIT 31

Exhibit EE-1