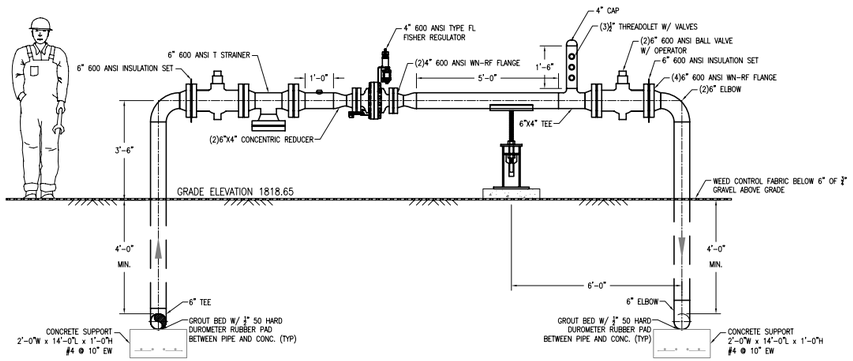

SECTION A-A

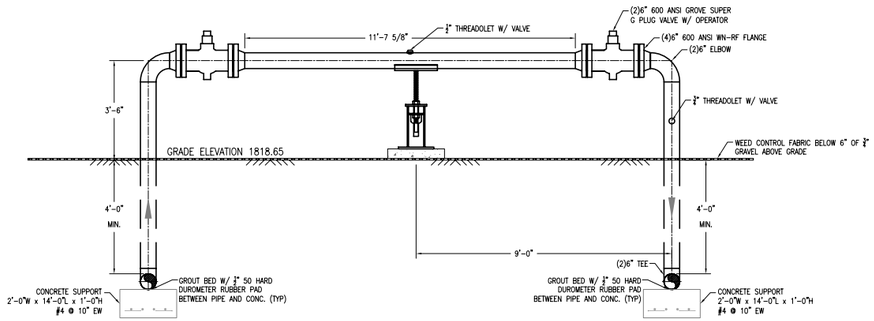

SECTION B-B

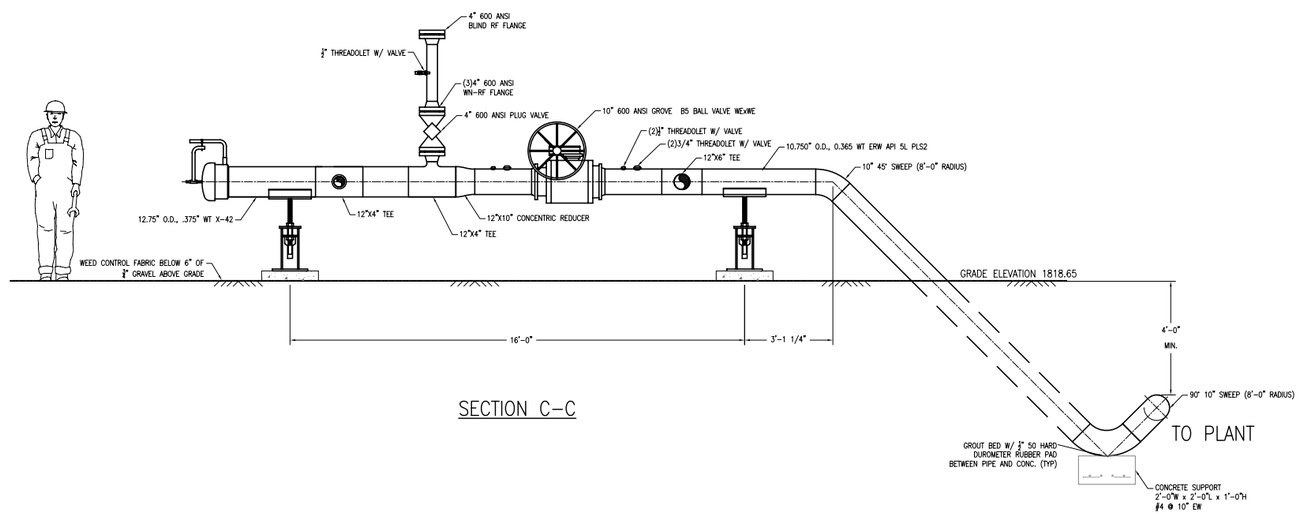

SECTION C-C

AS BUILT

REGISTERED PROFESSIONAL ENGINEER
REG NO. 9918
DAVID P. YEXLEY
SOUTH DAKOTA

NO.	DATE	BY	REVISION
1	10/29/10	GB	AS BUILT- CORRECTED ELEV

BASIN ELECTRIC POWER COOPERATIVE
A Touchstone Energy® Cooperative

MONTANA-DAKOTA UTILITIES CO.
A Division of MDU Resources Group, Inc.

GAS PIPELINE INTERCONNECT SECTIONS
DEER CREEK STATION

SCALE	DATE	DRAWN BY	APPROVED BY
3/8"=1'	6/2/10	CASSIE PETER	DAVE YEXLEY

DCS-MP-ONG-0002