TERRAIN	FLAT BLACK LOAM

TRYGVE A. TROOIEN PARCEL 70 (to 159+46)	TROOIEN LAND CO. PARCEL 80 (159+46 to 161+31)	ENGEN FARMS, LLP PARCEL 90 (161+31 to 178+87)	JANICE E. & ROBERT L. ROSENTHAL PARCEL 100 (from 178+87)

COUNTY & STATE — BROOKINGS COUNTY, SOUTH DAKOTA

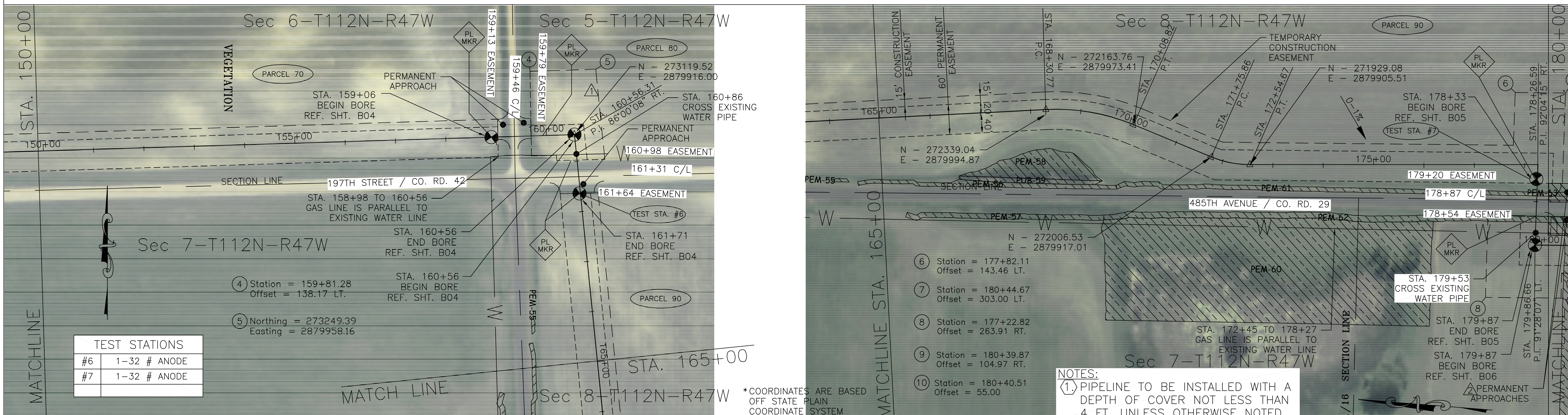

NOTES:
1. PIPELINE TO BE INSTALLED WITH A DEPTH OF COVER NOT LESS THAN 4 FT. UNLESS OTHERWISE NOTED.

VEGETATION	159+13	ROAD	159+79	160+98	ROAD	161+64	171+71	WETLAND	178+54	ROAD	179+20 180+46	WETLAND

CLASS LOCATION	CLASS I

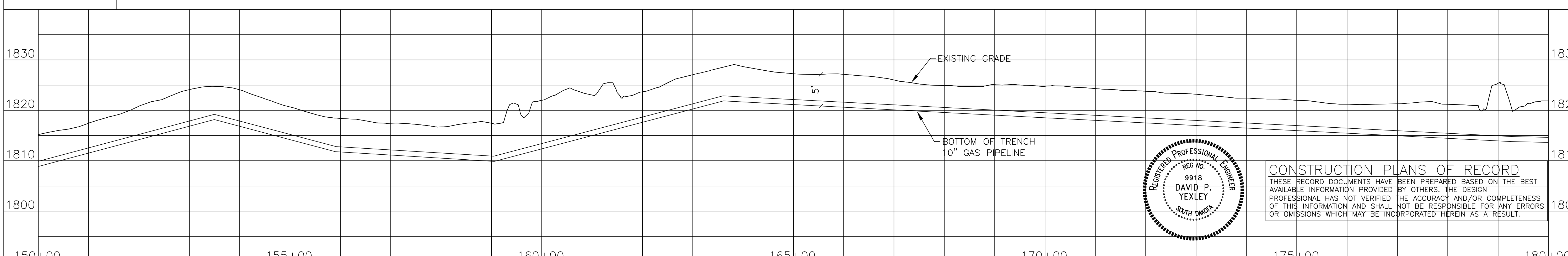

REGISTERED PROFESSIONAL ENGINEER REG NO. 9918 DAVID P. YEXLEY SOUTH DAKOTA

CONSTRUCTION PLANS OF RECORD
THESE RECORD DOCUMENTS HAVE BEEN PREPARED BASED ON THE BEST AVAILABLE INFORMATION PROVIDED BY OTHERS. THE DESIGN PROFESSIONAL HAS NOT VERIFIED THE ACCURACY AND/OR COMPLETENESS OF THIS INFORMATION AND SHALL NOT BE RESPONSIBLE FOR ANY ERRORS OR OMISSIONS WHICH MAY BE INCORPORATED HEREIN AS A RESULT.

LEGEND
RIGHT OF WAY
PROPOSED 10" GAS PIPELINE
EDGE OF PAVEMENT — EOG
CENTERLINE OF ROAD
FENCE LINE — x
SECTION LINE
PROPERTY LINE — P/L
OVERHEAD POWER — P
TREE LINE
UNDERGROUND WATER LINE — W
UNDERGROUND CABLE — C
EXTRA WORK SPACE — EWS
TEMPORARY CONSTRUCTION LIMITS
BUILDING
FLOW ARROW
ACCESS EASEMENT
WETLAND
TEST LEAD (TEST STA.)
PIPELINE MARKER (PL MKR)

MATERIAL LEGEND	
ITEM NO.	DESCRIPTION
1	API5L PSL2, Gr. B, X52, 0.250" w.t., 14–18 mil FBE coated
2	API5L PSL2, Gr. B, X52, 0.279" w.t., 16–18 mil FBE w/ARO coating 30 mils

0 100' 200' 400'
SCALE IN FEET

PIPE WALL THICKNESS NOTES:
1. ALL LINE PIPE IS 0.250" w.t. PIPE.
2. ALL PIPE ON THE INTERCONNECT PROPERTY, PLANT PROPERTY AND BORES IS 0.279" w.t. PIPE. (EXCEPTION ON BORES B9 & B12, PIPE = 0.250" w.t. PIPE)
3. APPROXIMATELY 240' OF PIPE, 120' ON EITHER SIDE OF THE CENTER OF THE CRANE CROSSINGS IS 0.279" w.t. PIPE.

BANNER
Engineering | Architecture | Surveying
409 22nd Avenue S. | PO Box 298
Brookings, South Dakota 57006
605.692.6342
www.bannerassociates.com
Designing Projects | Building Trust

REVISIONS		
No.	DATE	
1	11/17/10	MOVED TEMPORARY EASEMENT 20' EAST
2	11/17/10	ADDED PERMANENT APPROACHES

BASIN ELECTRIC POWER COOPERATIVE
A Touchstone Energy® Cooperative

MONTANA-DAKOTA UTILITIES CO.
A Division of MDU Resources Group, Inc.

DEER CREEK STATION GAS PIPELINE
DEUEL & BROOKINGS COUNTY, SOUTH DAKOTA
DCS–CP–ONG–0007

DRAWN BY: AME | CHECK BY: SDR
SIGNED BY: DPY
DATE: JANUARY 2011 ENGINEER
PLAN & PROFILE 150+00 TO 180+00
DCS–006